OPTIMUM®

MASCHINEN - GERMANY

METAL WORKING MACHINERY

THE OPTIMUM IN TERMS OF QUALITY, PRICE-PERFORMANCE AND SERVICE

Официальный дилер в России:
ООО «ПО ИП»
Тел: +7 (812)602-77-08
E-mail: info@poip.ru
www.poip.ru



MAIN CATALOGUE 2021

OFFER FOR OUR CUSTOMERS, WHO ARE ENTREPRENEURS AND NOT CONSUMERS ARE

THE OPTIMUM IN TERMS OF QUALITY, PRICE-PERFORMANCE AND SERVICE



Dear Customer,

To support any conceivable metalworking application, we have composed an assortment in our OPTIMUM domain catalogue that covers many areas with suitable machines. Each of our products impresses with its quality, precision, long service life and value stability. OPTIMUM offers the right machine for most tasks – from bench-top drills to CNC lathes.

Your requirements are our target

For more than 25 years, we have focused on the design, development and production of OPTIMUM machines, and for more than 10 years on CNC machines.– We work unceasingly on continually optimising our machines. One important point here is also production, which is of great importance to us. This is why we made a careful choice of manufacturers to supplement our own production facilities. We set great store by the fact that these manufacturers meet our internal quality requirements. Besides our own manufacturing operations, OPTIMUM exclusively produces with manufacturers who meet our requirements. This means that we can offer you metalworking machines that impress on many scores.

OPTIMUM has built up a good reputation in the course of the years on what is a continually changing and developing tool and machine market. We are proud to say that we combine expertise, experience and a balanced price-performance ratio. Our utmost priority is you as a satisfied customer. With our motivated and expert personnel we strive to complete OPTIMUM's know-how and deliver it to you our customers.



Kilian Stürmer
Managing Director

YouTube

DISCOVER OUR PRODUCT VIDEOS NOW!

All of our product videos are available for you to watch on our YouTube channel **OPTIMUM Maschinen Germany GmbH**. **Subscribe** to our YouTube channel, to avoid missing any of the new videos.



Sales and service Germany at Hallstadt/Bamberg

Customer Service

Our professional OPTIMUM customer service gives every customer the ability to choose the performance they need from our comprehensive program of services at any time.

Our services can be broken down into the following four modules:
Inventory and requirements analysis,
System planning and consulting,
Installation und commissioning
Maintenance and repairs

The OPTIMUM service field force, and our service partners, ensure reliable, nationwide, on-site service for our customers.

Dealers and service

Thanks to our comprehensive network of specialist dealers, you always have a local partner with OPTIMUM who guarantees the best possible advice, intensive support, and trouble-free after-sales service. And, of course, our expert staff is there to help you at any time. Please don't hesitate to contact our qualified team if you have any questions. We are happy to help.

On-site for you: in Europe and worldwide

For many years, OPTIMUM Maschinen Germany has been synonymous with the development, design and production of metalworking machines and CNC machines characterised by high quality standards. In the course of the years, we have continually expanded our sales and service network.

Today, OPTIMUM Maschinen Germany GmbH, German company, collaborates globally with professional partners from its headquarters in Hallstadt near Bamberg: OPTIMUM is represented all over Europe by retailers with great performance. Our international sales network extends well beyond Germany's borders to many countries all over the world. This helps us to ensure that our customers can rely on the fast, uncomplicated and service-oriented expertise and quality standards of OPTIMUM thanks to our extensive sales organisation. We have established a responsible market position that you can trust in the course of the years!

Our products

Are you looking for a functional machine that offers a comprehensive feature set at an attractive price? Then you are making the right decision in purchasing an OPTIMUM metalworking machine. Our machines impress with excellent quality, precise manufacturing, and they offer an "OPTIMUM" price-performance ratio. We cater to a comprehensive tool machine and sheet metal working programme and are guaranteed to have the right machine variant for your needs in our assortment. You can rely on OPTIMUM, because we can realise every single one of your requirements in the metalworking environment. This main catalogue will give you an impression of our capabilities and our wide product portfolio.

OPTIMUM QUALITY





Production on our own CNC machines



State-of-the-art 5-axis manufacturing

PRODUCTION

Since 2003, OPTIMUM Maschinen Germany GmbH has produced a large share of its metalworking machines in its own factory in Yangzhou China. The quality here is monitored by German quality management officers and production supervisors. A further major part of our OPTIMUM metalworking machines is exclusively produced for OPTIMUM in line with special requirements within the company group.

QUALITY

OPTIMUM products are produced under high quality requirements. A price comparison with equivalent and comparable products will give you the assurance that our OPTIMUM machines are always products that stand up to any comparison in terms of operating convenience, equipment level, quality, technology and value for money and are thus always a good buy for you. Check out the robust design and durability for yourself; this is what our machines stand for in a metalworking world.
You can purchase the OPTIMUM brand with confidence, and assure the best possible quality for your operations. There are many products that look identical, or similar, on the market, but which by no means achieve our OPTIMUM quality standards.

OPTIMUM®
MASCHINEN - GERMANY



Optimum plant in Yangzhou, China

All OPTIMUM products are produced under high quality requirements!


Milling machine production



Metal-cutting band saw production


Drilling machine production


Lathe production

GERMAN QUALITY – MADE IN CHINA







Our production facilities

Optimum Maschinen Germany GmbH commenced production in 2006 in Touqiao Town near Yangzhou in Jiangsu Province, only about three hours by car from Shanghai. 180 employees, including 40 technicians work here on a total area of 20 000 m^2 - a building floor space of 9 000 m^2.

Today, we produce our Optimum machine program in three production plants with a total area of 74 000 m^2 and a building floor space of 30 000 m^2 employing some 230 staff in production.

We permanently meet requirements for precision machining and economic efficiency. We develop and configure the best solutions for our customers and take responsibility for them.

Our factories carry out strict technical process and quality controls based on ISO 9001.

With a team of experienced experts and technicians and advanced production facilities, we produce quality products such as small and medium CNC machining centres, CNC lathes, CNC milling machines, milling and drilling machines and lathes for industrial and home use.















DIN EN ISO 9001 – excellent quality

Our factory is DIN EN ISO 9001 certified. This means that all company departments and services are subject to strict quality requirements. And this means consistently high quality for you. The objective of high quality is thrilled customers. And achieving this demanding certification is ultimately driven by this approach. The key to the long-term success of our enterprise is also a relationship of trust with customers and suppliers. This explains why it is just as important to us as the sustainable quality of our products.

QUALITY

Our standards are high. And we strictly adhere to them!



Achieving our quality goals is our top priority!

CERTIFIED QUALITY IN OUR PRODUCTION FACILITIES

The excellence and safety of our products are assured by a system of internal processes, based on regular and frequent inspections in our factories and along the logistics chain. In order to ensure compliance with the strict requirements, each production site is regularly inspected.

At Optimum, development and production are in the same hands, and the company sets high standards in all areas.

This is why our customers get what they expect from Optimum: innovative, well thought-out products with high practical suitability and an exceptionally long service life.



QUALITY CONTROL

Our company has developed a carefully planned quality management system and is certified according to ISO 9001:2008.

This system is an integral part of our operational workflows. No exceptions or compromises are made or entered into with regard to the quality level of the products from production.

Our Quality Assurance department is staffed by skilled employees who ensure that only products of impeccable quality are sold.

The Quality Assurance department consists of experienced technicians who are supervised by our German technicians, and attach great importance to high quality and impeccable product quality. Each production step is checked and compared at all times with the available specifications.



QUALITY ASSURANCE DEPARTMENT

We want satisfied customers. This explains why our products' compliance with the customer quality requirements described earlier on is our company's top priority.







PRODUCTION SUPPORT



Our Engineering department has a well-coordinated team of specialists with excellent engineering qualifications. Their established expertise allows flexible and creative implementation of all requirements posed for our products and services.

A team of employees directly influences the production process on site through regular training and checks. It is only through this intensive support at the production site that we are in a position to achieve the proverbial OPTIMUM.







QUALITY MANAGEMENT, PRODUCTION, INCOMING GOODS INSPECTION

Besides adhering to delivery deadlines and service, the quality of our products is extremely important to us. Continuous on-site checks by our quality manager ensure our quality. Our comprehensive incoming goods inspection is performed in line with generally accepted technical guidelines.

QUALITY MANAGEMENT, INCOMING GOODS INSPECTION

Our quality managers from Germany are the first contacts for quality compliance on site. They are responsible for the dimensional accuracy of the components, for monitoring and quality assurance of the manufacturing process; they collaborate closely with our Engineering department at head office in Germany, thus ensuring an optimal symbiosis.

PLANNING



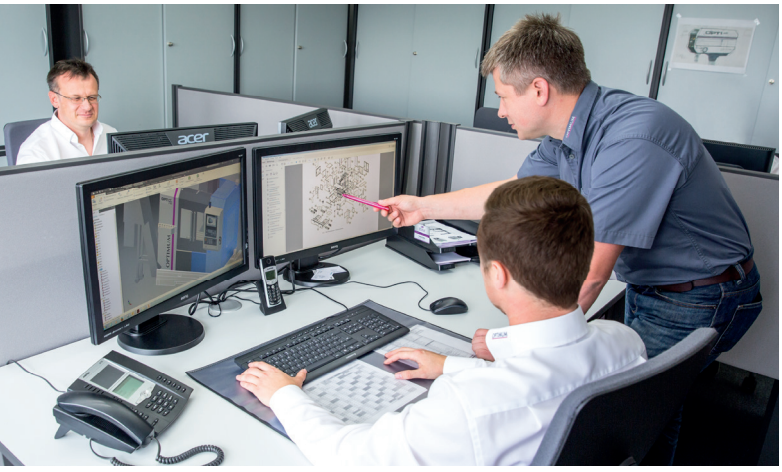



As early as the planning phase our engineering department manages the development of new products, which are manufactured both our facility and facilities operated by our partners. Major benefits: this ensures that market factors and customer requirements are immediately adopted into our workflow, setting the stage for a successful product design.

DEVELOPMENT

Development relies exclusively on state-of-the-art 3D CAD software, which we use to create a virtual model of the machine. Besides ensuring optimum functionality of the machines, our development process also targets re-usability of the data generated during the development phase. These data are not only used for devising production documents and manuals, but are also used for computations, for computer-aided manufacturing, and for visualisation and animations.

PRACTICAL TESTING

Our engineers combine theory and practice. To avoid leaving anything to chance in terms of product satisfaction, all of our machines and tools go through application engineering tests, and we also consistently involve selected customers in this process. This means that each new product is expected to prove itself in the daily grind before it comes a fixed part of our product range. Engineering analysis helps us to discover and eliminate any remaining weak points.

The clearly engineering oriented approach of our staff – in addition to the premium quality of our products, and our expert service – contribute towards constantly high levels of customer satisfaction. And our focus on technically affine employees ensures our market success – today and looking forward!



TECHNICAL CUSTOMER SUPPORT

Our customers rightly expect our specialists to use their knowledge and experience to their utmost satisfaction. Our product consultants support users with technical information. To allow this to happen, our customers can use our free telephone hotline and our info email address to request qualified information and solutions at short notice.

TECHNICAL DOCUMENTATION AND RISK ANALYSES

Our technical authors again achieve a high standardised level that meets or even exceeds all requirements. These huge efforts exclusively serve the purpose of facilitating the process of familiarisation with the machine for our customers, and ensuring permanent and safe operations.

Risk mitigation measures are developed to compensate for any safety risks identified in the scope of analysis. After implementing the measures, the residual risk is then evaluated.



SAFEGUARDING COPYRIGHTS

To secure the rewards of our technical development work for both ourselves and our customers, patent and utility model protection is essential for our in-house developments. This helps us permanently keep the technical lead that OPTIMUM products have.

The entire catalogue is protected by copyright. Additionally, to protect our products, we register our rights to our brands, patents and designs where possible in each individual case. We take strong action against any violation of our intellectual property.



SUPPLIER MANAGEMENT



Regular work meetings between our engineers and suppliers help to transfer our new developments and enhancements into series production at the manufacturing location in a targeted way. This direct support at our production facilities has been indispensable in manufacturing the quality products that our customers have trusted for more than 25 years.



SALES SUPPORT

The requirements for OPTIMUM machines are equally as diverse as the production requirements of our end customers and the workpieces to be machined. To ensure this, our representatives and retailers have access to the entire application-specific know-how of our engineers in case of queries.

In a qualified and explanatory sales talk, our customers are given the support they need to tune their choice of products to match their needs.



TRAINING

For employees from Engineering, Service and Sales as well as for our customers: Successful use of our products depends and is driven to a decisive extent by the fact that we pass on our technology know-how to our dealers, their sales and service staff and our customers through training sessions. The major benefits: this qualification offers the ability to ensure professionally founded consultancy and problem solving in all dealings with the customer. At our training centre, we offer practically-oriented product training that aim to disseminate professional knowledge in a highly intuitive way.



SUPPLY OF SPARE PARTS

We know that rapid availability of spare parts is one of the major preconditions for a working, customer-oriented service solution.

The planning, coordination and provisioning of spare parts is tuned at OPTIMUM Maschinen Germany GmbH so that our customers have the greatest possible benefits in terms of economic efficiency and speed.



SIEMENS COOPERATION PARTNER FOR CNC TRAINING

Siemens has for many years been the system supplier of the control and drive technology for CNC-controlled lathes and milling machines by OPTIMUM Maschinen Germany GmbH. Due to our long-standing and successful collaboration, a cooperation partnership for CNC training in Bavaria was agreed in June 2012. Target-group specific courses familiarise the participants of the training program with the various Sinumerik controls.





SERVICE SUPPORT

... after all, good service is important to us!

In service cases, our OPTIMUM technicians are available at any time with their experience to support your workshop operations and ensure fast and targeted repairs.

In close cooperation with the service centre and its internal and external staff, weaknesses are analysed and customer needs registered. These weaknesses and needs are then evaluated from an engineering point of view and set out as tangible requirements or action catalogues.

TABLE OF CONTENTS

Drilling machines

V-belt drive / Vario

DQ series 20
B 17Pro basic 26
D 17Pro - D 33Pro 28
DP 26 - DP 33 30
DX series 32
B 16H - B 34H 36
DH 24FT - DH 28FS 38
DH 18V 40
B 24HV - B 34HV 42
DH 24BV - DH 40BV 44

Gear unit/Vario

DH 40G / DH 40GP 48
DH 40CT / DH 40CTP 50
DH 26GT - DH 32GS 52
DH 28GSV / DH 32GSV 54
B 40GSP / B 40GSM 56
DH 35G - DH 45V 58
B 50GSM 62
DH 55G / DH 55V 64

Radial drilling machines

RB 6T / RB 8S 68
RD 3 - RD 6 70

Magnetic core drilling machines

DM Series 78

Accessories for drilling machines 86









Milling machines

Bench milling machines

BF 16 Vario 96
MH-20 - MH 25 SV 98
MB 4 104
MH 35G - MH 50V 108

Universal milling machines

MB 4P / MB 4PV 112
MT 50E 114
MT 50 - MT 60 116

Multifunctional milling machines

MF 2-B - MF 4V 122
MT 100 126
MT 130S 128
MT 200 130







MT 230S 132
MZ 2S / MZ 4S 134

Milling machines – accessories 139



Lathes

Bench lathes (without chassis)

TU 1503V 160
TU 2004V 161
TU 2304 / TU 2304V 162
TU 2406 / TU 2406V 164
TU 2506 / TU 2506V 166
TU 2807 / TU 2807V 168
TU 3008 / TU 3008G / TU 3008V 170
TM 3110 172







Lathes (two-part with steel chassis)

TH 3309 / TH 3309D / TH 3309V 176
TM 3310 / TM 3310D 178
TH 3610 / TH 3610D 180
TH 4010 / TH 4010D / TH 4010V 182
TM 4010 / TM 4010D 184



Lathes (with steel/cast chassis)

TZ 4 / TZ4V 188
TH 4210 - TH 4215D / TH 4210V 192
TX 4414 196
TH 4610D - TH 4620D / TH 4615V 198
TX 5216 / TX 6222 / TX 5216V 202
TH 5615D - TH 5630D / TH 5620V 206
TH 6620D / TH 6630D 210
TH 8020D / TH 8030D 212



Lathes – accessories 215

Position displays

DRO 5 231
DPA 21 / DPA 22 / DPA 31 232
Newall DP 700 234



Metal-cutting band saws

SQ-V10 / SQ-V13 238
SP 11V / SP 13V 240
S 100G 241
S 131GH 242
S 150G Vario 243
S 181 / S 181G 244
SD 200G 246



S 210G 247
S 275N / S 275NV 248
SD 281V 249
S 285DG 250
SD 300DG / SD 300V 251
SD 310V 252
S 350DG 253
SD 351AV 254
SD 500 / SD 500AV 255



Metal-cutting circular saws

CS 275 / CS 315 258



Metal-cutting band saws-accessories 215

Power grinders

Surface grinders
GT series 266

Surface grinders – accessories 274

Drill bit grinding machine
GQ-D13 276
GH 10T - GH 20T 277



Belt grinder
GB 100S 280
GBS 75 / GBS 150 281



Disk grinder
GB 305D 283
TS 305 284



Bench grinders
GU 15 - GU 30 286
GZ 20D - GZ 40D 287



Combined and universal grinding machines
GU 20S / GU 25S / GU 30S 290
Brush deburrer GB 250B 291
GU 15B - GU 25B 292
GZ 20C - GZ 40C 293



Vario conversions 300
Accessories for grinding machines 310



Polishing machines

GU 20P - GU 35P 296
GZ 40P 298



Vario conversions 300



Sheet metal/metal working

Edges FP 3 312
Three-roll bending machine BM 3 312
Metal processing SAR 1000 313
Lever tin snips PS 125 - PS 300 314
Arbor presses DDP 10 - DDP 50 314



Accessories

Machine mobile base 306
Machine lamps 316
Coolant accessories 320
Measuring accessories 322



CLASSIFICATION

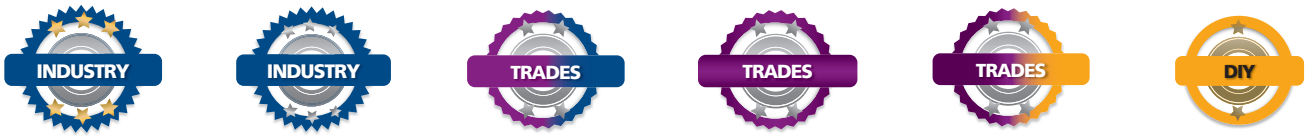

HIGHEST QUALITY STANDARD	HIGH QUALITY STANDARD	TRADES WITH INDUSTRIAL REQUIREMENTS	TRADES	PROFESSIONAL DO-IT-YOURSELFERS	DO-IT-YOURSELFERS
› Industrial quality › Highest quality standard for excellent precision › For the toughest applications › Very long service life › Uncompromising quality for the toughest requirements	› Industrial quality › Excellent quality standard › Long service life › For strict requirements	› Machine tools geared for daily use in trades up to professional deployment › for medium-size series production › Comprehensive accessories	› Machine tools geared for daily use in trades › for small to medium-size series production › Comprehensive accessories	› Machines for do-it-yourselfers with high requirements › Basic machines with better equipment level	› Basic machines › Comprehensive accessories

BENCH DRILLING MACHINES

V-BELT



DRILLING MACHINES

COLUMN DRILLING MACHINES

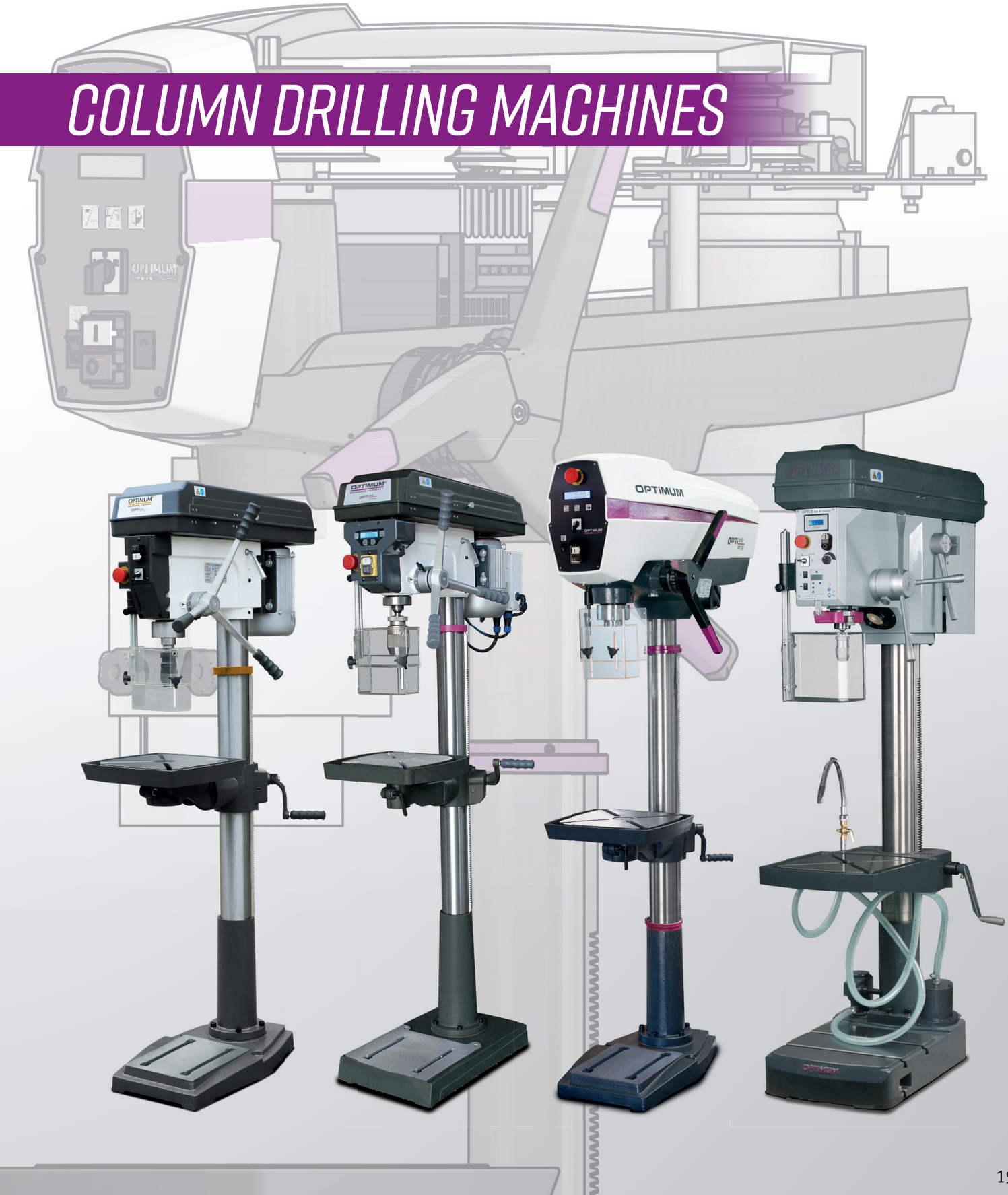

NEW

DTY

Entry level bench-top drilling machines with V-belt drive

Facts that impress in terms of quality, performance and price

- Separate emergency stop push button
- Drilling depth stop
- Precise workmanship; stable drilling table with diagonal T-slots and all-around cooling water channel (DQ 18/DQ 22)
- Drilling table pivots through ± 45° and rotates through 360°
- Single-piece, pressure cast aluminium spindle sleeve lever with Softgrip handles
- Precision spindle bore
- Safety electrical system in 24 V DC
- Guaranteed concentricity less than 0.03 mm measured in the drilling spindle sleeve
- Drill spindle with precision ball bearings
- Premium quick clamping chuck
- Generously dimensioned, height adjustable protective screen with safety switch (DQ 22)
- GATES quality belts
- Right-handed/left-handed rotation
- Generously dimensioned baseplate with T-slots, pronounced ribbing on rear

Belt drive



Fig. Belt drive DQ 22.
Two belt pulleys for DQ 14/18

› Best possible force transmission thanks to to aluminium pulleys in combination with GATES quality toothed belts
› V-belt cover with safety switch

LED machine lamp



› Anti-glare LED lighting integrated into the drilling head No annoying shadows



Fig.: DQ 14



Fig.: DQ 22

available from January 2021

Technical data and accessories

BELT

Model	DQ 14	DQ 18	DQ 22
Article no. (230V)	3191040	3191042	3191044
Article no. (400V)	-	-	3191045
Output			
Electrical connection	230 V / 1 Ph ~50 Hz	230 V / 1 Ph ~50 Hz	230 V or 400V
Motor output	350 W	450 W	550 W
Drilling performance			
Drilling performance in steel (S235JR)	Ø 13 mm	Ø 15.9 mm	Ø 16 mm
Continuous drilling performance steel (S235JR)	Ø 12 mm	Ø 14 mm	Ø 14 mm
Spindle			
Spindle sleeve stroke	52 mm	65 mm	85 mm
Throat	104 mm	127 mm	169 mm
Spindle holder	fixed/B16	MT 2	MT 2
Rotational speeds			
Spindle speeds	700 - 2 500 rpm	600 - 2 400 rpm	300 - 2 300 rpm
Number of speeds	5 speeds	5 speeds	12 speeds
Drilling table			
Drilling table workspace L x W	170 x 170 mm	200 x 200 mm	270 x 270 mm
T-slot width	14 mm, 2 diagonal	14 mm, 2 diagonal	14 mm, 2 diagonal
Load bearing capacity of table	8 kg	12 kg	15 kg
Drill table rotation/lateral pivot	360° / ± 45°	360° / ± 45°	360° / ± 45°
Max. distance spindle - drilling table	250 mm	319 mm	460 mm
Machine base			
Machine base work area L x W	138 x 128 mm	145 x 143 mm	191 x 187 mm
Max. distance spindle - machine base	340 mm	518 mm	639 mm
Dimensions and weight			
Column diameter	Ø 46 mm	Ø 60 mm	Ø 70 mm
Length x width x height	472 x 283 x 634 mm	568 x 319 x 849 mm	700 x 351 x 1006 mm
Net weight	18.5 kg	28.5 kg	41.7 kg

Accessories	Article no.
Hold-down device 14 mm/M12	3352031
Twist drill bits HSS-CO 5%, 25 parts	3201010
Twist drill bits HSS-CO 5%, 51 parts	3201020
Twist drill bits HSS-CO 5%, 41 parts	3201021
Quick clamping drill chuck 1 - 8 mm; B16	3050608
Quick clamping drill chuck 1 - 10 mm; B16	3050610
NEW **Quick-action drill chuck DKC 13,** 0 - 13 mm	3050632
NEW **Quick-action drill chuck DKC 16,** 0 - 16 mm	3050633
Universal coolant unit 230 V	3351999
Coolant mist lubricator MMC 1 with magnetic holder	3356663
Coolant hose KMS 2	3356660
Assortment of clamping tools size 12	3352017
› More accessories for drills from page 86	

Accessories DQ 18/DQ 22	Article no.
Direct quick release chuck 1 - 16 mm	3050571
Direct quick release chuck 1 - 13 mm	3050572
Morse taper MT 2/B16	3050659
Twist drill bit HSS / MT 2, 9 parts	3051002
Thread tapping chuck MT 2	3050702

For a large selection of machine vises see oon page 93

Contents of package
DQ 14/ DQ 18
› Quick clamping drill chuck 1 - 15.9 mm
› T-slot nuts
DQ 22
› Quick clamping drill chuck 1 - 16 mm
› Morse taper MT 2/B16
› T-slot nuts

NEW

DTY

Inexpensive column drilling machine with V-belt drive

Facts that impress in terms of quality, performance and price

- User-friendly safety switch with IP 54 degree of protection
- Separate emergency stop push button
- Safety electrical system in 24 V DC
- Guaranteed concentricity less than 0.03 mm measured in the drilling spindle sleeve
- Drill spindle with precision ball bearings
- OPTIMUM quick clamping chuck in standard scope of delivery
- Precise workmanship; stable drilling table with two diagonal T-slots and all-around cooling water channel
- Drilling depth stop
- V-belt cover with safety switch
- Generously dimensioned, height adjustable protective screen with safety switch

Belt drive



› Best possible force transmission thanks to to aluminium pulleys in combination with GATES quality toothed belts
› V-belt cover with safety switch

Speed change



› The infinitely variable V-belt drive is used to position the V-belt to the desired V-belt diameter with the hand lever while the drilling spindle is rotating. This causes the speed to change

LED machine lamp



› Anti-glare LED lighting integrated into the drilling head No annoying shadows



available from January 2021

BELT

Technical specifications, accessories and dimensions

Model	DQ 20V
Article no.	3191080
Output	
Electrical connection	230 V / 1 Ph
Motor output	0.75 kW
Drilling performance	
Drilling performance in steel (S235JR)	Ø 16 mm
Continuous drilling performance steel (S235JR)	Ø 14 mm
Spindle	
Spindle sleeve stroke	80 mm
Throat	152 mm
Spindle holder	MT 2
Rotational speeds	
Spindle speeds	450 - 2 500 rpm
Number of speeds	Electronically controlled
Drilling table	
Workspace length x width	243 x 243 mm
T-slot size	14 mm, 2 diagonal
Load bearing capacity of table	15 kg
Drill table rotation/lateral pivot	360° / ± 45°
Max. distance spindle - drilling table	423 mm
Machine base	
Machine base work area L x W	181 x 187 mm
Clearance spindle - machine base	max. 599 mm
Dimensions and weight	
Column diameter	Ø 65 mm
Length x width x height	581 x 397 x 957 mm
Net weight	40.7 kg

Dimensions

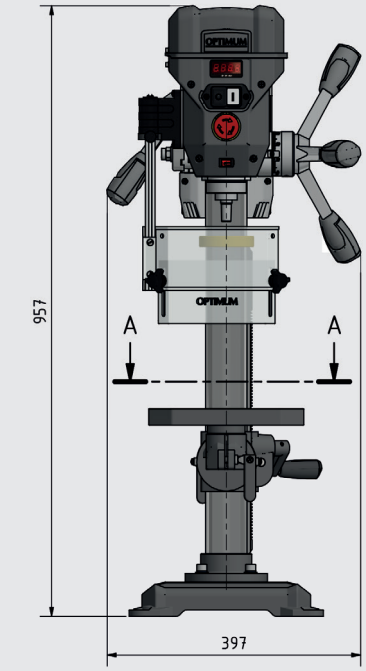

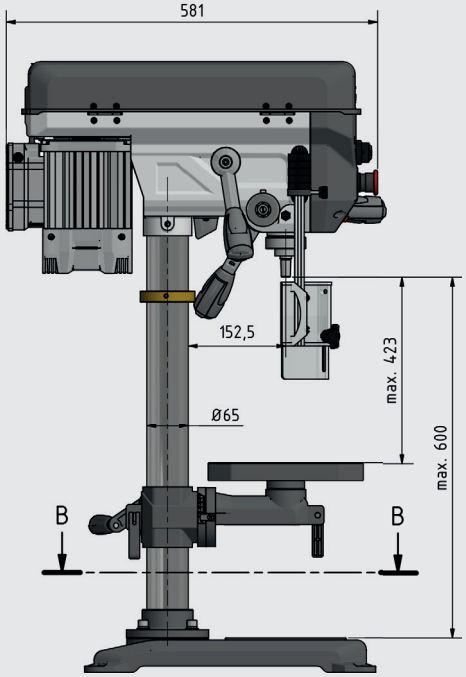

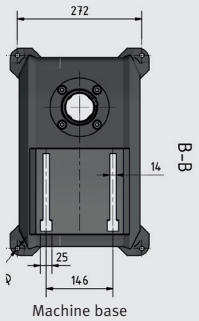

Machine base

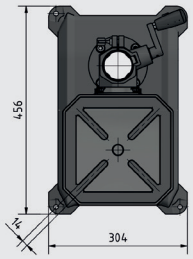

Machine table

Accessories	Article no.
Direct quick release chuck MT 2, 1 - 16 mm	3050571
Direct quick release chuck MT 2, 1 - 13 mm	3050572
Morse taper MT 2/B16	3050659
Twist drill bit HSS / MT 2, 9 parts	3051002
Assortment of clamping tools size 10, 58-part size	3352016
Taper drill punch MSP1	3050636
Twist drill bits HSS-CO 5%, 25 parts	3201010
Twist drill bits HSS-CO 5%, 51 parts	3201020
Twist drill bits HSS-CO 5%, 41 parts	3201021
Universal coolant unit	3351999
Coolant mist lubricator MMC 1 with magnetic holder	3356663
Coolant hose KMS 2	3356660

For a large selection of machine vises see oon page 93
› More accessories for drills from page 86

NEW

TRADES

Inexpensive post drills with V-belt drive

Facts that impress in terms of quality, performance and price

- Precision-machined drilling table, ± 45° pivots to side and rotates through 360°
- Solid, generously dimensioned baseplate with grooves, rear with pronounced ribbing
- Ground multi-tooth carrier
- Best possible force transmission thanks to to aluminium pulleys in combination with GATES quality toothed belts
- Guaranteed concentricity of drill spindle better than 0.03 mm measured in the drilling spindle
- Drilling spindle with precision ball bearings
- Quick clamping chuck in standard scope of delivery
- Belt cover with safety switch
- User-friendly switch as per IP 54
- Separate emergency stop push button

Belt drive



› Best possible force transmission thanks to to aluminium pulleys in combination with GATES quality toothed belts
› V-belt cover with safety switch



Fig.: DQ 25



Fig.: DQ 32

BELT

Technical specifications, accessories and dimensions

Model	DQ 25	DQ 32
Article no.	3191047	3191049
Output		
Electrical connection	400 V / 3 Ph ~50 Hz	400 V / 3 Ph ~50 Hz
Motor output	750 W	1.1 kW
Drilling performance		
Drilling performance in steel (S235JR)	Ø 25 mm	Ø 30 mm
Continuous drilling performance steel (S235JR)	Ø 20 mm	Ø 25 mm
Spindle		
Spindle sleeve stroke	80 mm	120 mm
Throat	181 mm	254 mm
Spindle holder	MT 3	MT 4
Rotational speeds		
Spindle speeds	200 - 2 440 rpm	120 - 1 810 rpm
Number of speeds	12	9
Drilling table		
Drilling table workspace L x W	280 x 280 mm	355 x 355 mm
T-slot size	14 mm, 2 diagonal	14 mm, 2 diagonal
Load bearing capacity	40 kg	55 kg
Drill table rotation/lateral pivot	360° / ± 45°	360° / ± 45°
Max. distance spindle - drilling table	690 mm	640 mm
Machine base		
Machine base L x W	500 x 300 mm	575 x 350 mm
Machine base work area L x W	200 x 260 mm	230 x 295 mm
T-slot size/distance/amount	15 mm / 120 mm / 2	15 mm / 138 mm / 2
Max. distance spindle - machine base	1 200 mm	1,170 mm
Dimensions and weight		
Column diameter	Ø 73 mm	Ø 92 mm
Length x width x height	700 x 350 x 1,620 mm	850 x 390 x 1,660 mm
Net weight	71 kg	120 kg

Dimensions DQ 25

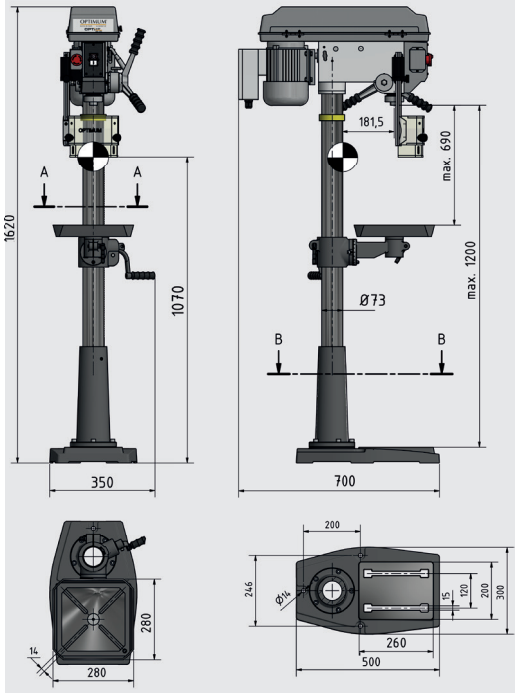

Dimensions DQ 32

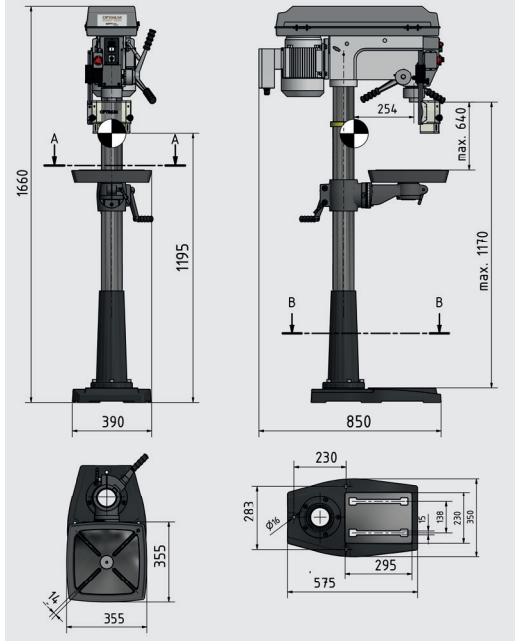

Accessories	Article no.
Hold-down device 14 mm/M12	3352031
Twist drill bits HSS-CO 5%, 25 parts	3201010
Twist drill bits HSS-CO 5%, 51 parts	3201020
Twist drill bits HSS-CO 5%, 41 parts	3201021
Quick clamping drill chuck 1 - 8 mm; B16	3050608
Quick clamping drill chuck 1 - 10 mm; B16	3050610
NEW **Quick-action drill chuck DKC 13,** 0 - 13 mm	3050632
NEW **Quick-action drill chuck DKC 16,** 0 - 16 mm	3050633
Universal coolant unit 230 V	3351999
Coolant mist lubricator MMC 1 with magnetic holder	3356663
Coolant hose KMS 2	3356660
Assortment of clamping tools size 12	3352017

For a large selection of machine vises see on page 93
› More accessories for drills from page 86

Contents of package

- › Quick clamping drill chuck 1 - 16 mm
- › T-slot nuts
- › Morse taper MT 3/B16 (DQ 25)
- › Morse taper MT 4/B16 (DQ 32)
- › Push-out tool

Benchtop machine with V-belt drive

Facts that impress in terms of quality, performance and price

- User-friendly safety switch with IP 54 degree of protection
- Separate emergency stop push button
- Guaranteed concentricity less than 0.02 mm measured in the drilling spindle sleeve
- Drill spindle with precision ball bearings
- Premium quick clamping chuck
- Drilling depth stop
- Drill chuck guard, folding
- Precise workmanship; stable drilling table with two diagonal T-slots and all-around cooling water channel
- V-belt cover with safety switch
- Single-piece, pressure cast aluminium spindle sleeve lever with Softgrip handles

Belt drive



› Ground multi-tooth carrier
› Best possible force transmission thanks to to aluminium pulleys in combination with GATES quality toothed belts
› V-belt cover with safety switch



BELT

Technical specifications, accessories and dimensions

Model	B 17Pro basic
Article no.	3003161
Output	
Electrical connection	230 V / 1 Ph ~50 Hz
Motor output	490 W
Drilling performance	
Drilling performance in steel (S235JR)	Ø 15.5 mm
Continuous drilling performance steel (S235JR)	Ø 12 mm
Spindle	
Spindle sleeve stroke	65 mm
Spindle holder	MT 2
Throat	152 mm
Rotational speeds	
Spindle speeds	680 - 2 700 rpm
Number of speeds	5 speeds
Drilling table	
Workspace length x width	235 x 220 mm
T-slot size	12 mm, 2 diagonal
Load bearing capacity of table	18 kg
Drill table rotation/lateral pivot	360° / ± 45°
Max. distance spindle - drilling table	325 mm
Machine base	
Machine base L x W	210 x 215 mm
Machine base work area L x W	170 x 180 mm
T-slot size/distance/amount	14 mm / 148 mm / 2
Max. distance spindle - machine base	530 mm
Dimensions and weight	
Column diameter	Ø 60 mm
Length x width x height	565 x 275 x 840 mm
Net weight	41.5 kg

Dimensions

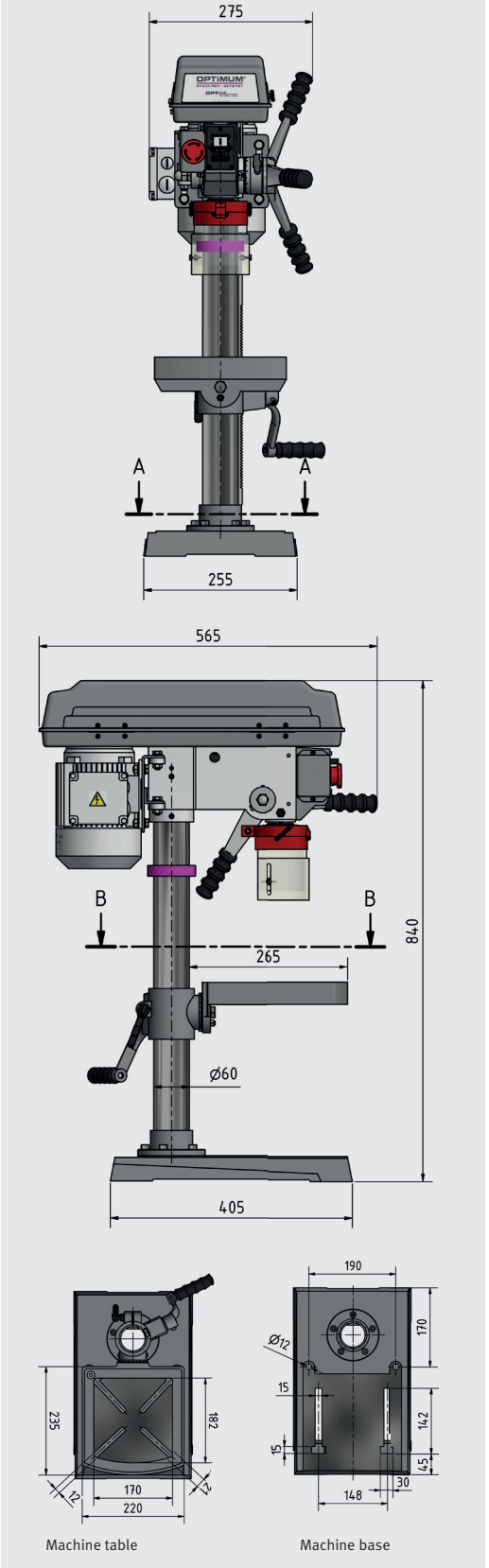

Accessories	Article no.
Blank holder 14 mm/M 12 (for the machine base)	3352031
Twist drill bits HSS-CO 5%, 25 parts	3201010
Twist drill bits HSS-CO 5%, 51 parts	3201020
Quick clamping drill chuck 1 - 8 mm; B16	3050608
Quick clamping drill chuck 1 - 10 mm; B16	3050610
NEW **Quick-action drill chuck DKC 13,** 0 - 13 mm	3050632
NEW **Quick-action drill chuck DKC 16,** 0 - 16 mm	3050633
Direct quick release chuck 1 - 16 mm	3050571
Direct quick release chuck 1 - 13 mm	3050572
Morse taper MT 2/B16	3050659
Twist drill bit HSS / MT 2, 9 parts	3051002
Assortment of clamping tools size 10	3352016
Universal coolant unit 230 V	3351999
Coolant mist lubricator MMC 1 with magnetic holder	3356663
Coolant hose KMS 2	3356660

For a large selection of machine vises see oon page 93
› More accessories for drills from page 86

Contents of package

› Quick clamping drill chuck 1 - 15.5 mm
› Morse cone
› T-slot nuts

TRADES

Bench and column drilling machines with V-belt drive and digital drilling depth and speed display

Facts that impress in terms of quality, performance and price

- Industrial motor
- User-friendly safety switch with IP 54 degree of protection
- Digital drilling depth and speed display integrated in housing
- Separate emergency stop push button
- Precision spindle bore
- Safety electrical system in 24 V DC
- Guaranteed concentricity less than 0.02 mm measured in the drilling spindle sleeve
- Drill spindle with precision ball bearings
- Premium quick clamping chuck as standard equipment
- Drilling depth stop
- Precise workmanship; stable drilling table with two diagonal T-slots and all-around cooling water channel
- V-belt cover with safety switch
- Single-piece, pressure cast aluminium spindle sleeve lever with Softgrip handles
- Generously dimensioned, height adjustable protective screen with safety switch
- Heavy duty design of entire machine

As of D 23 Pro
- GATES quality belts

As of D 23 Pro / 400 V
- Right-handed/left-handed rotation

D 33Pro
- Solid, generously dimensioned baseplate with T-slots, pronounced ribbing on rear

Belt drive



› Smooth action thanks to polished multi-tooth carrier
› Best possible force transmission thanks to to aluminium pulleys in combination with GATES quality toothed belts (as of D 23Pro)



Fig.: D 17Pro



Fig.: D 23Pro



Fig.: D 26Pro



Fig.: D 33Pro

Technical data and accessories

BELT

Model	D 17Pro	D 23Pro	D 26Pro	D 33Pro
Article no. (230 V)	3003010	3003015	-	-
Article no. (400 V)	-	3003020	3003030	3003040
Output				
Electrical connection	230 V / 1 Ph ~50 Hz	230 V/1 Ph or 400 V/3 Ph	400 V / 3 Ph ~50 Hz	400 V / 3 Ph ~50 Hz
Motor output	500 W	750 W	750 W	1.1 kW
Drilling performance				
Drilling performance in steel (S235JR)	Ø 16 mm	Ø 25 mm	Ø 25 mm	Ø 30 mm
Continuous drilling performance steel (S235JR)	Ø 12 mm	Ø 20 mm	Ø 20 mm	Ø 25 mm
Spindle				
Spindle sleeve stroke	65 mm	80 mm	85 mm	120 mm
Spindle holder	MT 2	MT 2	MT 3	MT 4
Throat	152 mm	180 mm	210 mm	254 mm
Rotational speeds				
Spindle speeds	680 - 2 700 rpm	200 - 2 440 rpm	200 - 2 440 rpm	120 - 1 810 rpm
Number of speeds	5 speeds	12 speeds	12 speeds	9 speeds
Drilling table				
Workspace length x width	235 x 220 mm	280 x 245 mm	330 x 290 mm	475 x 425 mm
T-slot size	12 mm, 2 diagonal	12 mm, 2 diagonal	14 mm, 2 diagonal	14 mm, 2 diagonal
Load bearing capacity of table	18 kg	18 kg	20 kg	25 kg
Drill table rotation/lateral pivot	360° / ± 45°	360° / ± 45°	360° / ± 45°	360° / ± 45°
Max. distance spindle - drilling table	325 mm	425 mm	720 mm	695 mm
Machine base				
Machine base work area L x W	220 x 230 mm	240 x 250 mm	385 x 260 mm	410 x 325 mm
T-slot size/distance/amount	16 mm / 148 mm / 2	16 mm / 170 mm / 2	16 mm / 170 mm / 2	16 mm / 250 mm / 2
Clearance spindle - machine base	max. 530 mm	max. 618 mm	max. 1 230 mm	max. 1 180 mm
Dimensions and weight				
Column diameter	Ø 60 mm	Ø 73 mm	Ø 80 mm	Ø 92 mm
Length x width x height	565 x 275 x 840 mm	615 x 330 x 1 015 mm	670 x 355 x 1 640 mm	755 x 440 x 1 705 mm
Net weight	36.5 kg	58 kg / 63.5 kg	85 kg	132 kg

Accessories	Article no.
Hold-down device 14 mm/M12	3352031
Twist drill bits HSS-CO 5%, 25 parts	3201010
Twist drill bits HSS-CO 5%, 51 parts	3201020
Twist drill bits HSS-CO 5%, 41 parts	3201021
Quick clamping drill chuck 1 - 8 mm; B16	3050608
Quick clamping drill chuck 1 - 10 mm; B16	3050610
NEW **Quick-action drill chuck DKC 13,** 0-13 mm	3050632
NEW **Quick-action drill chuck DKC 16,** 0 - 16 mm	3050633
Universal coolant unit 230 V	3351999
Coolant mist lubricator MMC 1 with magnetic holder	3356663
Coolant hose KMS 2	3356660

For a large selection of machine vises see on page 93
› More accessories for drills from page 86

Contents of package
› Quick clamping drill chuck 1 - 16 mm
› Morse cone
› T-slot nuts

Accessories D 17Pro / D 23Pro	Article no.
Direct quick release chuck 1 - 16 mm	3050571
Direct quick release chuck 1 - 13 mm	3050572
Morse taper MT 2/B16	3050659
Twist drill bit HSS / MT 2, 9 parts	3051002
Thread tapping chuck MT 2	3050702
Assortment of clamping tools size 10	3352016
Assortment of clamping tools size 14	3352018

Accessories D 26Pro	Article no.
Direct quick release chuck 1 - 16 mm	3050573
Reduction sleeve MT 3 - MT 2	3050663
Morse taper MT 3/B16	3050660
Twist drill bit HSS / MT 3, 9 parts	3051003
Taper drill punch MSP1	3050636
Assortment of clamping tools size 12	3352017
Assortment of clamping tools size 14	3352018

Accessories B 33Pro	Article no.
Direct quick release chuck 1 - 16 mm	3050574
Reduction sleeve MT 4 - MT 3	3050664
Morse taper MT 4/B16	3050661
Taper drill punch MSP2	3050637
Assortment of clamping tools size 12	3352017
Assortment of clamping tools size 14	3352018

NEW

TRADES

DP 26T bench drill and DP 26F/DP 33 column drill with V-belt drive in modern design

Facts that impress in terms of quality, performance and price

- Heavy duty design of entire machine
- Slow action spindle thanks to new spindle design
- Industrial motor
- Separate emergency stop push button
- Drilling depth stop
- LED machine lamp integrated in drilling head
- V-belt cover with safety switch
- Precise workmanship; stable drilling table with diagonal T-slots and all-around cooling water channel
- Precision spindle bore
- Machine controls with safety electrical system in 24 V DC
- Thick walled steel column for high force absorption and stability
- Solid, generously dimensioned baseplate with T-slots

400 V machines

- Right-handed/left-handed rotation

State-of-the-art control solution



› Easily readable digital display for viewing the speed, depth gauge and zero point

Belt tension



› Premium Gates belts
› The toothed V-belts enable a higher power transmission to the shaft due to their smaller wrap angle at the V-belt pulleys
› Easy adjustment of the belt tension via excenter (toggle lever)

Drilling table



› Precise workmanship
› Robust with diagonal T-slots
› Circumferential coolant channel
› Pivots to side ± 45°
› Rotates through 360°



Fig.: DP 26T



Fig.: DP 33

Technical specifications, accessories and dimensions

BELT

Model	DP 26-T	DP 26-F	DP 33
Article no. (230 V)	3020620T	3020620F	-
Article no. (400 V)	3020625T	3020625F	3020640
Output			
Electrical connection	230 V / 1 Ph ~50 Hz or 400 V / 3 Ph ~50 Hz		400 V / 3 Ph ~50 Hz
Motor output	750 kW		1.1 kW
Drilling performance			
Drilling performance in steel (S235JR)	Ø 25 mm		Ø 30 mm
Continuous drilling performance steel (S235JR)	Ø 20 mm		Ø 25 mm
Spindle			
Spindle sleeve stroke	95 mm		125 mm
Spindle holder	MT 3		MT 4
Throat	209 mm		270 mm
Rotational speeds			
Spindle speeds	200 - 2 440 rpm		120 - 1 810 rpm
Number of speeds	12 speeds		9 speeds
Drilling table			
Workspace length x width	308 x 308 mm		387 x 387 mm
T-slot size	12 mm, 2 diagonal		14 mm, 2 diagonal
Load bearing capacity of table	45 kg		65 kg
Drill table pivots to side/rotates	± 45° / 360°		± 45° / 360°
Max. distance spindle - drilling table	400 mm	770 mm	775 mm
Machine base			
Workspace area base L x W	202 x 265 mm		270 x 327 mm
T-slot size/distance/amount	14 mm / 120 mm / 2		16 mm / 150 / 2
Clearance spindle - machine base	max. 592 mm	max. 1 300 mm	max. 1 300 mm
Dimensions and weight			
Column diameter	Ø 80 mm		Ø 92 mm
Length x width x height	748 x 406 x 1 025 mm	748 x 406 x 1 724 mm	945 x 480 x 1 880 mm
Net weight	107 kg	116 kg	186 kg

Dimensions DP 26-T

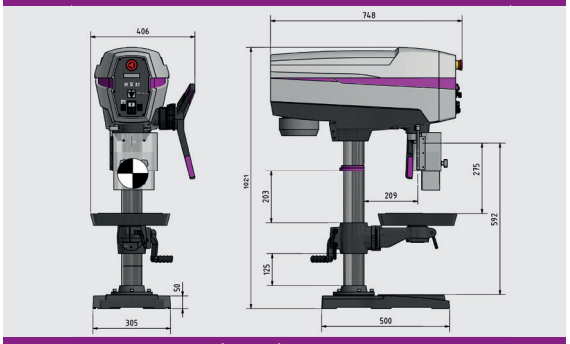

Dimensions DP 33

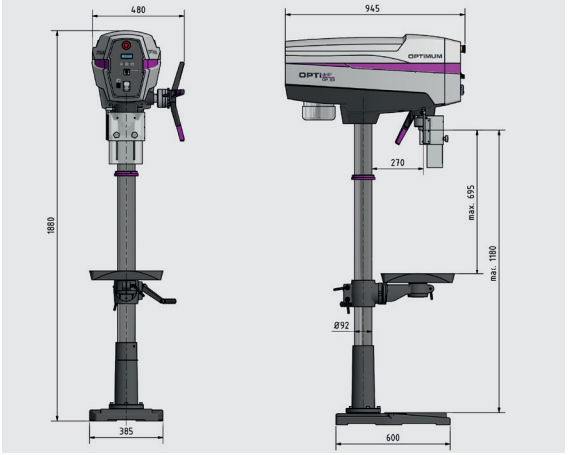

Contents of package
› Quick clamping drill chuck 0 - 16 mm
› T-slot nuts
› Push-out tool
› Adapter MT
› Operating tool

Accessories	Article no.
Twist drill bits HSS-CO 5%, 25 parts	3201010
Twist drill bits HSS-CO 5%, 51 parts	3201020
Twist drill bits HSS-CO 5%, 41 parts	3201021
NEW **Quick-action drill chuck DKC 13,** 0 - 13 mm	3050632
NEW **Quick-action drill chuck DKC 16,** 0 - 16 mm	3050633
Morse taper MT 3/B16	3050660
Morse taper MT 4/B16	3050661
Quick release chuck direct MT 3/ 1 - 16 mm	3050573
Quick release chuck direct MT 4/ 1 - 16 mm	3050574
Twist drill bit HSS / MT 3, 9 parts	3051003
Assortment of clamping tools size 10	3352016
Assortment of clamping tools size 12	3352017

For a large selection of machine vises see on page 93
› More accessories for drills from page 86

TRADES

Table drilling machine with continuously adjustable speed control

Facts that impress in terms of quality, performance and price

- Best possible force transmission thanks to to aluminium pulleys
- High-contrast, digital LED speed display integrated in housing, speed control via potentiometer
- Membrane keyboard, dirt/water-resistant , easy to clean
- Emergency stop button
- Drill spindle with precision ball bearings
- Premium OPTIMUM quick clamping chuck as standard
- Guaranteed concentricity less than 0.03 mm measured at the drilling spindle sleeve
- Height adjustability chuck guard with microswitch
- Precisely machined robust drilling table with parallel T-grooves
- Thick walled cast column for high force absorption and stability
- Solid baseplate with, pronounced ribbing on rear
- EMC filter class C2

DX 13V

- Drill head height adjustable

DX 15V

- Drilling table height-adjustable via rack



Fig.: DX 13V



Fig.: DX 15V

Technical specifications, accessories and dimensions

BELT VARIO

Model	DX 13V	DX 15V
Article no.	3020150	3020155
Output		
Electrical connection	230 V / 1 Ph ~50 Hz	
Motor output	850 W	
Drilling performance		
Drilling performance in steel (S235JR)	Ø 13 mm	Ø 15 mm
Continuous drilling performance steel (S235JR)	Ø 11 mm	Ø 12 mm
Spindle		
Spindle sleeve stroke	60 mm	
Spindle holder	B 16	MT 2
Throat	235 mm	
Rotational speeds		
Spindle speeds	100 - 3 000 rpm	
Number of speeds	Electronic speed control	
Drilling table		
Workspace length x width	-	290 x 290 mm
T-slot size/distance/amount	-	10 mm / 100 mm / 2
Rotating drilling table	-	360°
Clearance chuck - drilling table	-	98 - 375 mm
Machine base		
Machine base work area L x W	280 x 290 mm	290 x 280 mm
T-slot size/distance/amount	14 mm / 100 mm / 2	
Distance chuck - machine base	92 - 297 mm	290 - 355 mm
Dimensions and weight		
Column diameter	Ø 60 mm	
Length x width x height	325 x 517 x 895 mm	425 x 475 x 980 mm
Net weight	51 kg	66 kg

Dimensions DX 13V

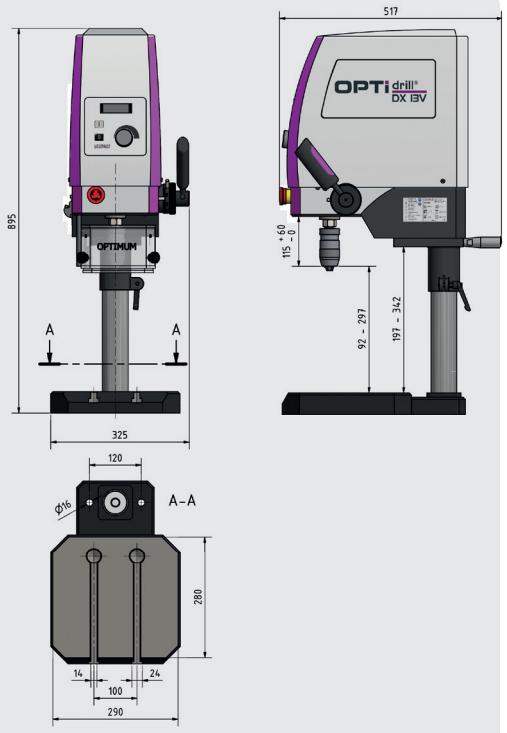

Dimensions DX 15V

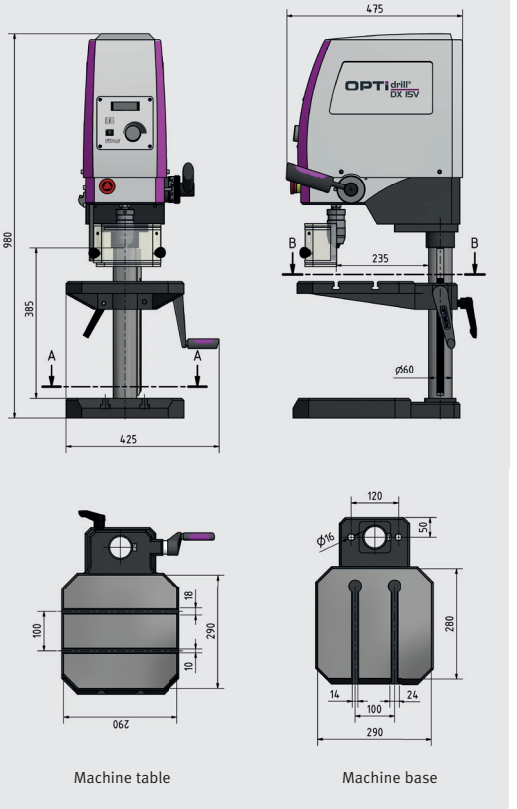

Machine table Machine base

Accessories	Article no.
Twist drill bits HSS-CO 5%, 25 parts	3201010
Twist drill bits HSS-CO 5%, 51 parts	3201020
Twist drill bits HSS-CO 5%, 41 parts	3201021
T-slot nut (individual) M 12 / 14 mm	3353025
Assortment of clamping tools size 12, 58-part size	3352017
Blank holder 14 mm/M12	3352031
Twist drill HSS MT 2	3051002
Quick release chuck direct MT 2 / 1 - 16 mm	3050571
Quick release chuck direct MT 2 / 1 - 13 mm	3050572
Morse taper MT 2/B16	3050659
T-slot nut (individual) M 8 / 10 mm	3353022
Assortment of clamping tools size 8, 58-part size	3352015
Thread tapping chuck 6 inserts, sizes M3 - M12	3050702
Thermdrill Basic Set	3060004
Universal coolant unit	3351999
Coolant mist lubricator MMC 1 with magnetic holder	3356663
Coolant hose KMS 2	3356660
Machine mobile base MSM 1	3353000
NEW **Universal machine and tool trolley** MSU 3	3352990
Universal machine and tool trolley MSU 4	3352991
› Information on the machine bases see page 92	

For a large selection of machine vises see on page 93
› More accessories for drills from page 86

Contents of package

› Quick clamping drill chuck 1 - 13 mm
› Adapter MT2-B16

*Note: The drilling machines (frequency inverters) comply with standard DIN EN 55011: Class C2. Important information see page 323

NEW

TRADES

Table drilling machine for precision mechanics with continuously adjustable speed control. Machine DX 17V highlight - menu-controlled operation of the drilling/thread tapping operation modes.

Facts that impress in terms of quality, performance and price

- Best possible force transmission thanks to to aluminium pulleys
- Emergency stop button
- Drill spindle with precision ball bearings
- Guaranteed concentricity less than 0.03 mm measured at the drilling spindle sleeve
- Dirt/water-resistant, easy-to-clean membrane keyboard
- Anti-glare LED lighting on the left and right, integrated into the drilling head. No annoying shadows
- Height adjustability chuck guard with microswitch for maximum protection
- Precision drilling table with parallel T-slots, precision surface finish
- Swivelling drilling table
- Solid base plate with parallel T-slots

DX 17E

- High-contrast, digital LCD speed display integrated in housing, speed control via potentiometer

DX 17V

- Menu-controlled operation of the drilling/thread tapping operation modes
- Thread tapping mode
- Language selection in display field, choice of DE-EN-FR-RU
- Digital reference point
- Digital parts counter
- Audible signal on reaching drilling depth
- Reduced speed in thread tapping mode

LCD display DX 17E



› Spindle speed
› Depth display (actual)
› CCW/CW run
› Unit of dimension mm / inch
› Set zero point

SINAMICS V20



› Energy-efficient and rugged solution with the SINAMICS V20 frequency inverter

YouTube

Follow this for the video presentation of our Optimum drilling machine DX 17V

Operating panel DX 17V

› During drill and thread tapping, the machine automatically sets the optimum speed for the tool, after the user enters the drill diameter and material.



OLED display

› Spindle speed
› Depth display (target/ actual)
› Counter
› Drilling or tapping depth
› Selected tool and material



Fig.: DX 17E



Fig.: DX 17V

Technical specifications, accessories and dimensions

BELT VARIO

Model	DX 17E	DX 17V
Article no.	3020168	3020170
Output		
Electrical connection	230 V / 1 Ph ~50 Hz	
Motor output	1.0 kW	
Drilling performance		
Drilling performance in steel (S235JR)	Ø 16 mm	
Continuous drilling performance steel (S235JR)	Ø 13 mm	
Spindle		
Spindle sleeve stroke	60 mm	
Spindle holder	MT 2	
Throat	235 mm	
Rotational speeds		
Spindle speeds	50 - 4 000 rpm	
Number of speeds	Electronic speed control	
Drilling table		
Workspace length x width	290 x 290 mm	
T-slot size/distance/amount	10 mm / 100 mm / 2	
Rotating drilling table	360°	
Clearance chuck - drilling table	98 - 315 mm	
Machine base		
Machine base work area L x W	290 x 280 mm	
T-slot size/distance/amount	14 mm / 100 mm / 2	
Distance chuck - machine base	max. 385 mm	
Dimensions and weight		
Column diameter	Ø 60 mm	
Length x width x height	425 x 481 x 910 mm	
Net weight	73 kg	



Fig.: MSU 3

Accessories	Article no.
Assortment of clamping tools size 8	3352015
Assortment of clamping tools size 12	3352017
Quick release chuck direct MT 2 / 16 mm	3050571
Quick release chuck direct MT 2 / 13 mm	3050572
T-slot nut 10 mm / M 8	3353020
T-slot nut 14 mm / M12	3353025
Twist drill bits HSS-CO 5%, 25 parts	3201010
Twist drill bits HSS-CO 5%, 51 parts	3201020
Twist drill bits HSS-CO 5%, 41 parts	3201021
Universal coolant unit	3351999
Coolant mist lubricator MMC 1 with magnetic holder	3356663
Coolant hose KMS 2	3356660
Machine mobile base MSM 1	3353000
NEW **Universal machine and tool trolley** MSU 3	3352990
Universal machine and tool trolley MSU 4	3352991
› Information on the machine bases see page 92	

For a large selection of machine vises see on page 93
› More accessories for drills from page 86

Dimensions

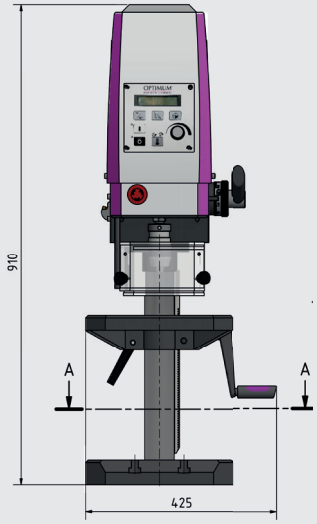

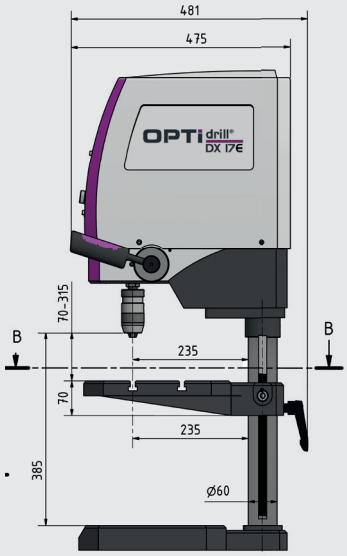

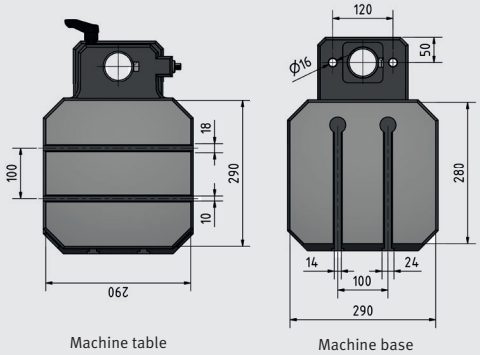

Machine table Machine base

Contents of package

› Quick clamping drill chuck 1 - 13 mm
› Adapter MT2-B16

*Note: The drilling machines (frequency inverters) comply with standard DIN EN 55011: Class C2. Important information see page 323

TRADES

Rugged bench/upright drills with V-belt drive

Facts that impress in terms of quality, performance and price

- Smooth, powerful industrial electric motor
- Separate emergency stop push button
- Rugged cast column
- Drilling depth stop
- Precision machined drilling table with two diagonal T-slots and all-around cooling water channel
- V-belt cover with safety switch
- V-belt quick tensioning device
- Solid, generously dimensioned baseplate with T-slots, pronounced ribbing on rear
- The baseplate can be used for particularly high workpieces by swivelling out the drilling table
- Guaranteed concentricity of drill spindle better than 0.015 mm measured in the drilling spindle
- Drill spindle with precision ball bearings
- Premium Optimum quick clamping chuck as standard equipment
- Generously dimensioned, height adjustable protective screen with safety switch

Ab B 24H
- Machine lamp

Ab B 24H/400V
- Right-handed/left-handed rotation

Ab B 28H
- Easy tool changes through integrated push-out tool
- Spindle sleeve lever made of steel

B 34H
- Digital depth sensor
- Digital speed display

Belt drive



› Smooth action thanks to polished multi-tooth carrier
› Best possible force transmission thanks to to aluminium pulleys in combination with GATES quality toothed belts



Fig.: B 16H



Fig.: B 24H



Fig.: B 28H



Fig.: B 34H

Technical data and accessories



Model	B 16H	B 24H	B 28H	B 34H
Article no. (230 V)	-	3020241	-	-
Article no. (400 V)	3020217	3020243	3020283	3020333
Output				
Electrical connection	400 V / 3 Ph ~50 Hz	230 V/1 Ph - 400 V/3 Ph	400 V / 3 Ph ~50 Hz	400 V / 3 Ph ~50 Hz
Motor output	550 W	850 W	850 W	1.5 / 2.2 kW
Drilling performance				
Drilling performance in steel (S235JR)	Ø 13 mm	Ø 24 mm	Ø 28 mm	Ø 34 mm
Continuous drilling performance steel (S235JR)	Ø 11 mm	Ø 20 mm	Ø 24 mm	Ø 26 mm
Spindle				
Spindle sleeve stroke	65 mm	85 mm	105 mm	160 mm
Spindle holder	MT 2	MT 2	MT 3	MT 4
Throat	130 mm	165 mm	200 mm	285 mm
Rotational speeds				
Spindle speeds	450 - 3 500 rpm	350 - 4 000 rpm	120 - 4 000 rpm	145 - 4 800 rpm
Number of speeds	5 speeds	7 speeds	16 speeds	2 x 9 speeds
Drilling table				
Workspace length x width	230 x 245 mm	280 x 300 mm	340 x 360 mm	420 x 400 mm
T-slot size	12 mm, 2 diagonal	14 mm, 2 diagonal	14 mm, 2 diagonal	14 mm, 2 diagonal
Rotating drilling table	360°	360°	360°	360°
Max. distance spindle - drilling table	370 mm	515 mm	860 mm	790 mm
Machine base				
Machine base work area L x W	200 x 240 mm	280 x 260 mm	320 x 320 mm	390 x 390 mm
T-slot size/distance/amount	12 mm / 80 mm / 2	14 mm / 120 mm / 2	14 mm / 120 mm / 2	14 mm / 150 mm / 2
Clearance spindle - machine base	max. 495 mm	max. 590 mm	max. 1 285 mm	max. 1 275 mm
Dimensions and weight				
Column diameter	Ø 60 mm	Ø 80 mm	Ø 92 mm	Ø 115 mm
Length x width x height	549 x 300 x 848 mm	665 x 434 x 998 mm	698 x 449 x 1 721 mm	918 x 585 x 1 895 mm
Net weight	54 kg	92 kg	142 kg	260 kg

Accessories	Article no.
Twist drill bits HSS-CO 5%, 25 parts	3201010
Twist drill bits HSS-CO 5%, 51 parts	3201020
Twist drill bits HSS-CO 5%, 41 parts	3201021
Universal coolant unit	3351999
Coolant mist lubricator MMC 1 with magnetic holder	3356663
Coolant hose KMS 2	3356660

For a large selection of machine vises see on page 93
› More accessories for drills from page 86

Contents of package

› Quick clamping drill chuck 1 – 13 mm (B 16H)
› Quick clamping drill chuck 1 – 16 mm (as of B 24H)
› Morse cone
› T-slot nuts

Accessories B 16H / B 24H	Article no.
Direct quick release chuck, 1 - 16 mm	3050571
Direct quick release chuck, 1 - 13 mm	3050572
Morse taper MT 2/B16	3050659
Twist drill bit HSS / MT 2, 9 parts	3051002
Assortment of clamping tools size 10, 58-part size	3352016
Taper drill punch MSP1	3050636

Accessories B 28H	Article no.
Quick release chuck direct MT 3	3050573
Reduction sleeve MT 3 - MT 2	3050663
Morse taper MT 3/B16	3050660
Twist drill bit HSS / MT 3, 9 parts	3051003
Assortment of clamping tools size 12, 58-part size	3352017
Thread tapping chuck MT 3, M3 - M12	3050705
Thread tapping chuck MT 3, M8 - M20	3050706

Accessories B 34H	Article no.
Quick release chuck direct MT 4	3050574
Morse taper MT 4/B16	3050661
Reduction sleeve MT 4 - MT 3	3050664
Assortment of clamping tools size 12, 58-part	3352017
Thread tapping chuck MT 4, M3 - M12	3050709
Thread tapping chuck MT 4, M8 - M20	3050710

TRADES

Rugged bench and column drilling machines with automatic spindle sleeve feed

Facts that impress in terms of quality, performance and price

- Best possible force transmission thanks to to aluminium pulleys in combination with GATES quality toothed belts
- Smooth action thanks to polished multi-tooth carrier
- Guaranteed concentricity guaranteed to be less than 0.015 mm measured in the drilling spindle sleeve
- Separate emergency stop push button
- Premium OPTIMUM quick clamping chuck as standard
- Generously dimensioned, height adjustable protective screen with safety switch for greatest possible user protection
- Drilling depth stop
- V-belt cover with safety switch
- V-belt tensioning device
- Right-handed/left-handed rotation
- Machine lamp integrated in drilling head
- Precision workmanship; rugged drilling table with two diagonal T-slots, 360° rotation and all-around cooling water channel
- Thick walled cast column for high force absorption and stability
- Solid baseplate, large dimensions und pronounced ribbing on rear

Automatic spindle sleeve feed



› Drilling depth stop adjustable within range of 0-85 or 105 mm. The feed is automatically switched off after reaching the preset drilling depth and turned back to its original position by the spring force of the return spring

V-belt tensioning device Spindle sleeve feed



› The feed is driven by a belt pulley
› The feed rate depends on the selected spindle speed
› Clamp and release the V-belt with a lever

Integrated push-out tool



› for simple tool changes



Fig.: DH 28FT



Fig.: DH 28FS

Technical specifications, accessories and dimensions



Model	DH 24FT	DH 28FT	DH 28FS
Article no.	3020244	3020260	3020284
Output			
Electrical connection	400 V / 3 Ph ~50 Hz		
Motor output	850 W		
Drilling performance			
Drilling performance in steel (S235JR)	Ø 24 mm	Ø 28 mm	
Continuous drilling performance steel (S235JR)	Ø 20 mm	Ø 24 mm	
Spindle			
Spindle sleeve stroke	85 mm	105 mm	
Spindle holder	MT 2	MT 3	
Throat	164 mm	200 mm	
Rotational speeds			
Spindle speeds	350 - 3 000 rpm	120 - 3 000 rpm	
Number of speeds	6 speeds	12 speeds	
Drilling table			
Workspace length x width	280 x 300 mm	340 x 360 mm	
T-slot size	14 mm, 2 diagonal	14 mm, 2 diagonal	
Max. distance spindle - drilling table	445 mm	540 mm	928 mm
Machine base			
Machine base work area L x W	280 x 360 mm	320 x 320 mm	
T-slot size/distance/amount	14 mm	14 mm / 120 mm / 2	
Clearance spindle - machine base	max. 595 mm	max. 700 mm	max. 1,279 mm
Dimensions and weight			
Column diameter	Ø 80 mm	Ø 92 mm	
Length x width x height	665 x 434 x 998 mm	715 x 455 x 1,150 mm	715 x 455 x 1,720 mm
Net weight	92 kg	132 kg	146 kg

Accessories DH 24FT	Article no.
Direct quick release chuck 1 - 16 mm	3050571
Direct quick release chuck 1 - 13 mm	3050572
Collet chuck set MT 2/ ER 25	3352052
Morse taper MT 2/B16	3050659
Twist drill bit HSS / MT 2, 9 parts	3051002
Twist drill bits HSS-CO 5%, 25 parts	3201010
Twist drill bits HSS-CO 5%, 51 parts	3201020
Twist drill bits HSS-CO 5%, 41 parts	3201021
Thread tapping chuck MT 2 / M3-M12	3050702

Accessories DH 28FT / DH 28FS	Article no.
Direct quick release chuck 1 - 16 mm	3050573
Reduction sleeve MT 3 - MT 2	3050663
Morse taper MT 3/B16	3050660
Twist drill bit HSS / MT 3, 9 parts	3051003
Thread tapping chuck MT 3, M3 - M12	3050705
Assortment of clamping tools size 12	3352017
Hold-down device 14 mm/M12	3352031
Twist drill bits HSS-CO 5%, 25 parts	3201010
Twist drill bits HSS-CO 5%, 51 parts	3201020
Twist drill bits HSS-CO 5%, 41 parts	3201021

For a large selection of machine vises see on page 93
› More accessories for drills from page 86

Contents of package
› Quick clamping drill chuck 1 - 16 mm
› Morse taper MT
› T-slot nut

TRADES

Rugged table drilling machine with powerful OPTIMUM brushless drive.

Machine highlight - menu-controlled operation of the drilling/thread tapping operation modes

Facts that impress in terms of quality, performance and price

- Smooth action and powerful brushless drive
- Best possible force transmission thanks to to aluminium pulleys in combination with GATES quality toothed belts
- Smooth action thanks to polished multi-tooth carrier
- Guaranteed concentricity guaranteed to be less than 0.015 mm measured in the drilling spindle sleeve
- Drilling spindle with precision ball bearings
- Membrane keyboard, soiling and water resistant, easy to clean
- Premium OPTIMUM quick clamping chuck as standard
- Separate emergency stop push button
- Precise workmanship; stable drilling table with 2 diagonal T-slots, rotates through 360°
- Circumferential coolant channel surrounding the drilling table
- Generously dimensioned, height adjustable protective screen with safety switch for greatest possible user protection
- Drilling depth stop
- V-belt cover with safety switch
- V-belt tensioning device
- Solid baseplate with, pronounced ribbing on rear

Powerful brushless drive



› Particularly smooth action
› Extremely powerful
› Virtually constant torque over the entire speed range

Menu-controlled operation
Operating modes
Drilling/thread tapping

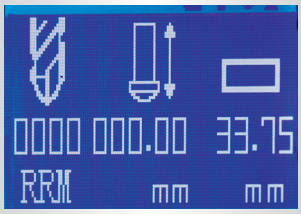

OLED display
› Spindle speed
› Depth display (target/actual)
› Drilling
› Thread tapping
› Workpiece thickness selection

Thermdrill



› Information on page 94



Figure: DH 18V

Technical specifications, accessories and dimensions

BELT VARIO

Model	DH 18V
Article no.	3020220
Output	
Electrical connection	230 V / 1 Ph ~50 Hz
Motor output	1.5 kW
Drilling performance	
Drilling performance in steel (S235JR)	Ø 18 mm
Continuous drilling performance steel (S235JR)	Ø 16 mm
Thread tapping steel (S235JR)	M10
Spindle	
Spindle sleeve stroke	65 mm
Spindle holder	MT 2
Throat	130 mm
Rotational speeds	
Spindle speeds	100 - 6 000 rpm
Number of speeds	5 speeds Electronic speed control
Drilling table	
Workspace length x width	230 x 245 mm
T-slot size	12 mm, 2 diagonal
Rotating drilling table	360°
Max. distance spindle - drilling table	370 mm
Machine base	
Machine base work area L x W	220 x 240 mm
T-slot size/distance/amount	12 mm / 80 mm / 2
Max. distance spindle - machine base	485 mm
Dimensions and weight	
Column diameter	Ø 60 mm
Length x width x height	445 x 552 x 850 mm
Net weight	64 kg

Dimensions

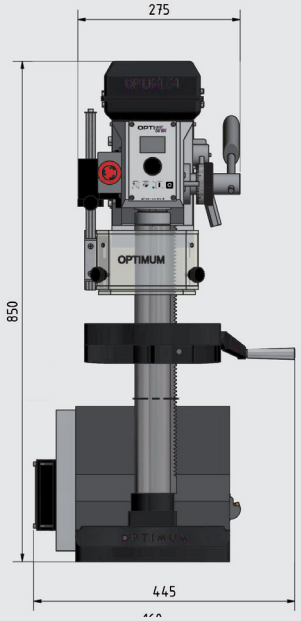

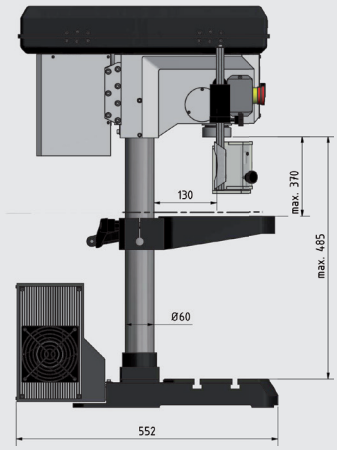

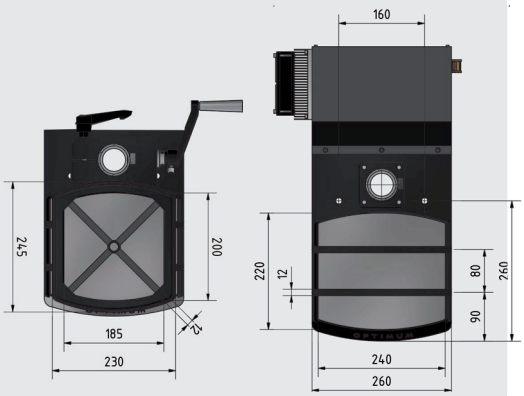

Machine table Machine base

Accessories	Article no.
Quick release chuck direct MT 2, 1 - 16 mm	3050571
Quick release chuck direct MT 2, 1 - 13 mm	3050572
Morse taper MT 2/B16	3050659
Twist drill bit HSS / MT 2, 9 parts	3051002
Assortment of clamping tools size 10, 58-part size	3352016
Taper drill punch MSP1	3050636
Universal coolant unit 230 V	3351999
Coolant mist lubricator MMC 1 with magnetic holder	3356663
Coolant hose KMS 2	3356660
Twist drill bits HSS-CO 5%, 25 parts	3201010
Twist drill bits HSS-CO 5%, 51 parts	3201020
Twist drill bits HSS-CO 5%, 41 parts	3201021
Thread tapping chuck, sizes M3 - M12	3050702
Thermdrill Basic Set	3060004
Machine mobile base MSM 1	3353000
Universal machine and tool trolley MSU 3	3352990

› Information on the machine bases see page 92

For a large selection of machine vises see page 93

› More accessories for drills from page 86

Contents of package

› Quick clamping drill chuck 1 - 13 mm
› Morse taper MT 2
› T-slot nuts

*Note: The drilling machines (frequency inverters) comply with standard DIN EN 55011: Class C2. Important information see page 323

TRADES

Rugged bench and upright drills with powerful OPTIMUM Brushless drive, electronic speed control

Facts that impress in terms of quality, performance and price

- Powerful brushless drive with particularly smooth action and high performance with almost constant torque over the entire speed range
- Best possible force transmission thanks to to aluminium pulleys in combination with GATES quality toothed belts
- Smooth action thanks to polished multi-tooth carrier
- Guaranteed concentricity guaranteed to be less than 0.015 mm measured in the drilling spindle sleeve
- Separate emergency stop push button
- Digital speed display integrated in housing
- Premium OPTIMUM quick clamping chuck as standard
- Generously dimensioned, height adjustable protective screen with safety switch for greatest possible user protection
- Single-piece, pressure cast aluminium spindle sleeve lever (B 24HV with Softgrip handles)
- Drilling depth stop
- V-belt cover with safety switch
- V-belt tensioning device
- Right-handed/left-handed rotation
- Machine lamp integrated in drilling head
- Precision workmanship; rugged drilling table with two diagonal T-slots, 360° rotation and all-around cooling water channel
- Thick walled cast column for high force absorption and stability
- Solid baseplate, large dimensions und pronounced ribbing on rear

From B 28HV

- Spindle sleeve lever made of steel
- Coolant system
- Chip filter in line with Machinery Directive
- Easy tool changes through integrated push-out tool

B 34HV

- Spindle sleeve stroke 160 mm
- Thread tapping function
- Digital depth sensor

B 34HV
Operational modes



"auto" operating mode

› Motor runs automatically after lever movement
› Stops again in original position
› Start and stop pushbuttons do not need to be actuated for repetitive drilling tasks

"Thread tapping" operating mode

› The motor is activated by moving the handle down
› The direction of rotation is changed by the limit switch on the adjustable drilling depth stop

Powerful brushless drive

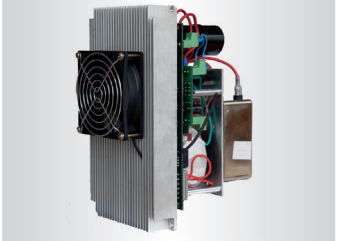

› Particularly smooth action
› Extremely powerful
› Virtually constant torque over the entire speed range



Fig.: B 24HV



Fig.: B 34HV

Technical data and accessories





Model	B 24HV	B 28HV	B 34HV
Article no.	3020245	3020285	3020335
Output			
Electrical connection	230 V / 1 Ph ~50 Hz	230 V / 1 Ph ~50 Hz	230 V / 1 Ph ~50 Hz
Motor output	1.5 kW	1.5 kW	2.2 kW
Coolant pump motor	-	40 W	40 W
Drilling performance			
Drilling performance in steel (S235JR)	Ø 24 mm	Ø 28 mm	Ø 34 mm
Continuous drilling performance steel (S235JR)	Ø 20 mm	Ø 24 mm	Ø 26 mm
Thread tapping steel (S235JR)	-	-	M 16 x 2 mm
Spindle			
Spindle sleeve stroke	85 mm	105 mm	160 mm
Spindle holder	MT 2	MT 3	MT 4
Throat	165 mm	200 mm	285 mm
Rotational speeds			
Spindle speeds	100 - 5 950 rpm	35 - 5 600 rpm	40 - 5 000 rpm
Number of speeds	4 speeds electronic speed control	12 speeds electronic speed control	9 speeds electronic speed control
Drilling table			
Workspace length x width	280 x 300 mm	340 x 360 mm	420 x 400 mm
T-slot size	14 mm, 2 diagonal	14 mm, 2 diagonal	14 mm, 2 diagonal
Load bearing capacity of table	50 kg	50 kg	60 kg
Rotating drilling table	360°	360°	360°
Max. distance spindle - drilling table	515 mm	860 mm	790 mm
Machine base			
Machine base work area L x W	280 x 260 mm	320 x 320 mm	390 x 390 mm
T-slot size/distance/amount	14 mm / 120 mm / 2	14 mm / 120 mm / 2	14 mm / 150 mm / 2
Rotating drilling table	360°	360°	360°
Clearance spindle - machine base	max. 590 mm	max. 1 285 mm	max. 1 275 mm
Dimensions and weight			
Column diameter	Ø 80 mm	Ø 92 mm	Ø 115 mm
Length x width x height	665 x 434 x 998 mm	701 x 474 x 1 755 mm	918 x 595 x 1 930 mm
Net weight	96 kg	166 kg	275 kg

Accessories	Article no.
Assortment of clamping tools size 12	3352017
Hold-down device 14 mm/M12	3352031
Twist drill bits HSS-CO 5%, 25 parts	3201010
Twist drill bits HSS-CO 5%, 51 parts	3201020
Twist drill bits HSS-CO 5%, 41 parts	3201021

For a large selection of machine vises see oon page 93

› More accessories for drills from page 86
› Coolant accessories see page 320

Accessories B 34HV	Article no.
Reduction sleeve MT 4 - MT 3	3050664
Thread tapping chuck MT 4, M3 - M12	3050709

Accessories B 24HV	Article no.
Twist drill bit HSS / MT 2, 9 parts	3051002
Thread tapping chuck MT 2	3050702

Accessories B 28HV	Article no.
Reduction sleeve MT 3 - MT 2	3050663
Twist drill bit HSS / MT 3, 9 parts	3051003
Thread tapping chuck MT 3 M3 - M12	3050705

Contents of package

› Direct quick release chuck 1 - 16 mm

*Note: The drilling machines (frequency inverters) comply with standard DIN EN 55011: Class C2. Important information see page 323

TRADES

Bench and column drilling machines with continuous, mechanical v-belt drive by BERGES. Quick speed adjustment using a lever

Facts that impress in terms of quality, performance and price

- Smooth action powerful electric motor
- Two speeds
- Right-handed/left-handed rotation
- V-belt cover with safety switch
- Digital speed display integrated in housing
- Guaranteed concentricity guaranteed to be less than 0.015 mm measured in the drilling spindle sleeve
- Height adjustable chuck guard with micro switch for greatest possible protection of the user
- Machine lamp integrated into drilling head
- Drilling spindle with precision ball bearings
- Premium quick clamping chuck as standard
- Precision, generously dimensioned drilling table, solid workmanship, with 2 diagonal T-slots, rotates through 360°, recirculating coolant duct
- Thick walled cast column for high force absorption and stability
- Solid baseplate with, pronounced ribbing on rear
- The baseplate can be used as a workspace for particularly high workpieces by swivelling out the drilling table

From DH 28BV

- Easy tool changes through integrated push-out tool
- Spindle sleeve lever made of steel

DH 40BV

- Digital depth sensor
- Reduction gearbox enables far higher torque

MADE IN GERMANY

VARIO DRIVE

Continuous mechanical gearbox



› Extremely reliable through manual speed control
› Powerful, smooth action
› Durable wide groove v-belt
› Speed change also possible while machine is running
› Permanent optimal motor efficiency
› **DH 40BV - with reduction gearbox**

Speed setting



› Quicker speed adjustment using a lever

Thermdrill



› Information on page 94



Figure: DH 24BV



Figure: DH 40BV

Technical data and accessories





Model	DH 24BV	DH 28BV	DH 40BV
Article no.	3020420	3020430	3020450
Output			
Electrical connection	400 V / 3 Ph ~50 Hz	400 V / 3 Ph ~50 Hz	400 V / 3 Ph ~50 Hz
Motor output	0.85 / 1.5 kW	0.85 / 1.5 kW	1.5 / 2.2 kW
Drilling performance			
Drilling performance in steel (S235JR)	Ø 24 mm	Ø 28 mm	Ø 40 mm
Continuous drilling performance steel (S235JR)	Ø 20 mm	Ø 24 mm	Ø 32 mm
Spindle			
Spindle sleeve stroke	85 mm	105 mm	160 mm
Spindle holder	MT 2	MT 3	MT 4
Throat	165 mm	200 mm	285 mm
Rotational speeds			
Spindle speeds	300 - 4 000 rpm	300 - 4 000 rpm	150 - 2 000 rpm
Number of speeds	2 speed motor, manual	2 speed motor, manual	2 speed motor, manual
Drilling table			
Workspace length x width	280 x 300 mm	340 x 360 mm	420 x 400 mm
T-slot size	14 mm, 2 diagonal	14 mm, 2 diagonal	14 mm, 2 diagonal
Max. distance spindle - drilling table	515 mm	860 mm	790 mm
Machine base			
Machine base work area L x W	280 x 260 mm	320 x 320 mm	390 x 400 mm
T-slot size/distance/amount	14 mm / 120 mm / 2	14 mm / 120 mm / 2	14 mm / 150 mm / 2
Rotating drilling table	360°	360°	360°
Clearance spindle - machine base	max. 681 mm	max. 1 285 mm	max. 1 275 mm
Dimensions and weight			
Column diameter	Ø 80 mm	Ø 92 mm	Ø 115 mm
Length x width x height	675 x 555 x 1 025 mm	755 x 550 x 1 745 mm	920 x 680 x 1 895 mm
Net weight	115 kg	152 kg	275 kg

Accessories	Article no.
Assortment of clamping tools size 12	3352017
Hold-down device 14 mm/M12	3352031
Twist drill bits HSS-CO 5%, 25 parts	3201010
Twist drill bits HSS-CO 5%, 51 parts	3201020
Twist drill bits HSS-CO 5%, 41 parts	3201021
Quick clamping drill chuck 1 - 8 mm; B16	3050608
Quick clamping drill chuck 1 - 10 mm; B16	3050610
Quick-action drill chuck DKC 13, 0-13 mm	3050632
Quick-action drill chuck DKC 16, 0-16 mm	3050633
Morse taper MT 2/B16	3050659
Morse taper MT 3/B16	3050660
Morse taper MT 4/B16	3050661
Quick release chuck direct MT 2 / 16 mm	3050571
Quick release chuck direct MT 2 / 13 mm	3050572
Quick release chuck direct MT 3 / 16 mm	3050573
Quick release chuck direct MT 4 / 16 mm	3050574

Accessories	Article no.
Reduction sleeve MT 3 - MT 2	3050663
Reduction sleeve MT 4 - MT 3	3050664
Twist drill bit HSS / MT 2, 9 parts	3051002
Twist drill bit HSS / MT 3, 9 parts	3051003
Thread tapping chuck MT 3, M3 - M12	3050705
Thread tapping chuck MT 3, M8 - M20	3050706
Universal coolant unit	3351999
Coolant mist lubricator MMC 1 with magnetic holder	3356663
Coolant hose KMS 2	3356660

For a large selection machine vises, see on page 93
› More accessories for drills from page 86

Contents of package

› Quick clamping drill chuck 1 - 16 mm
› Morse taper MT
› T-slot nuts

GEAR DRILLING MACHINES

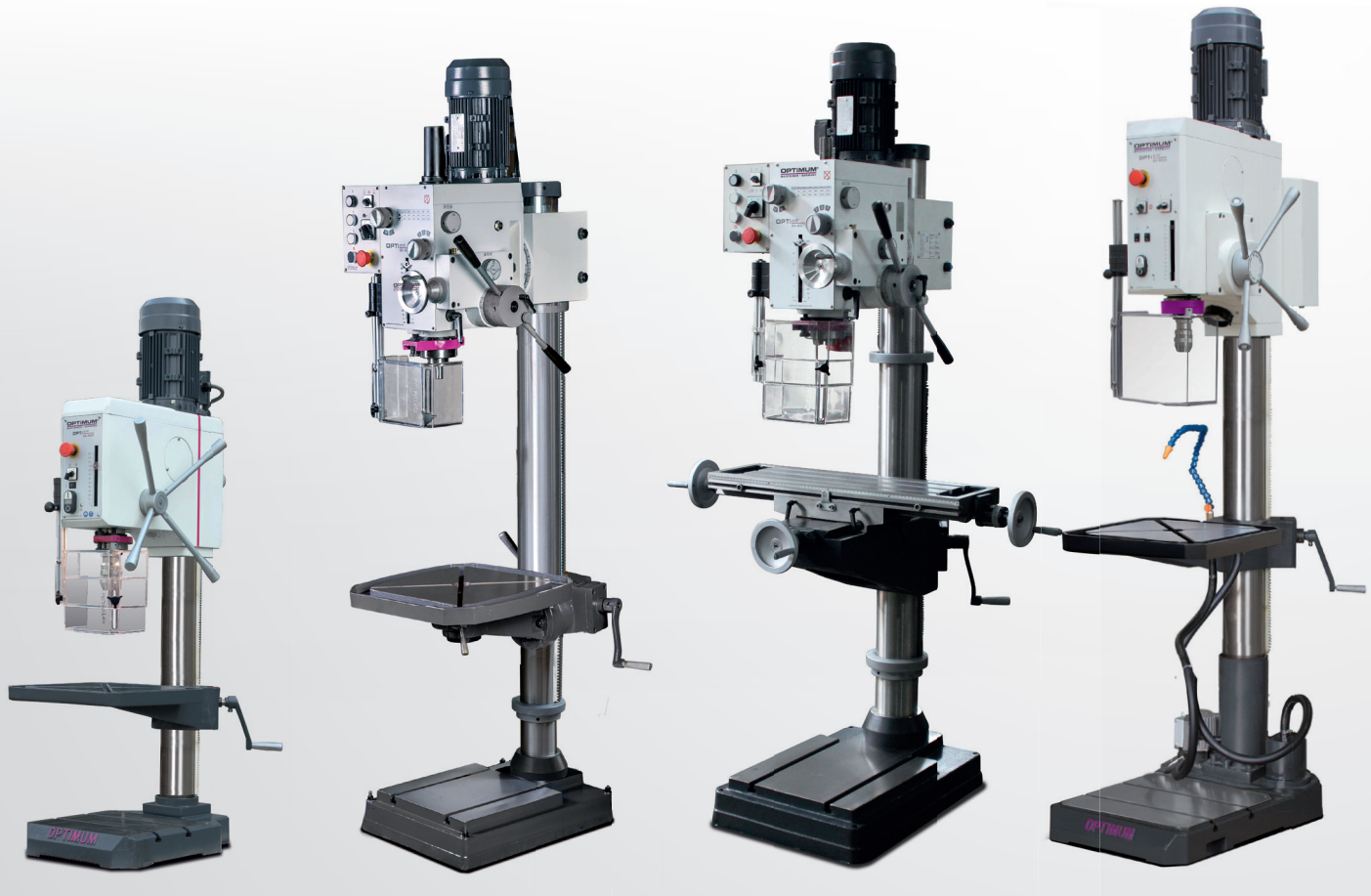

DRILLING MACHINES

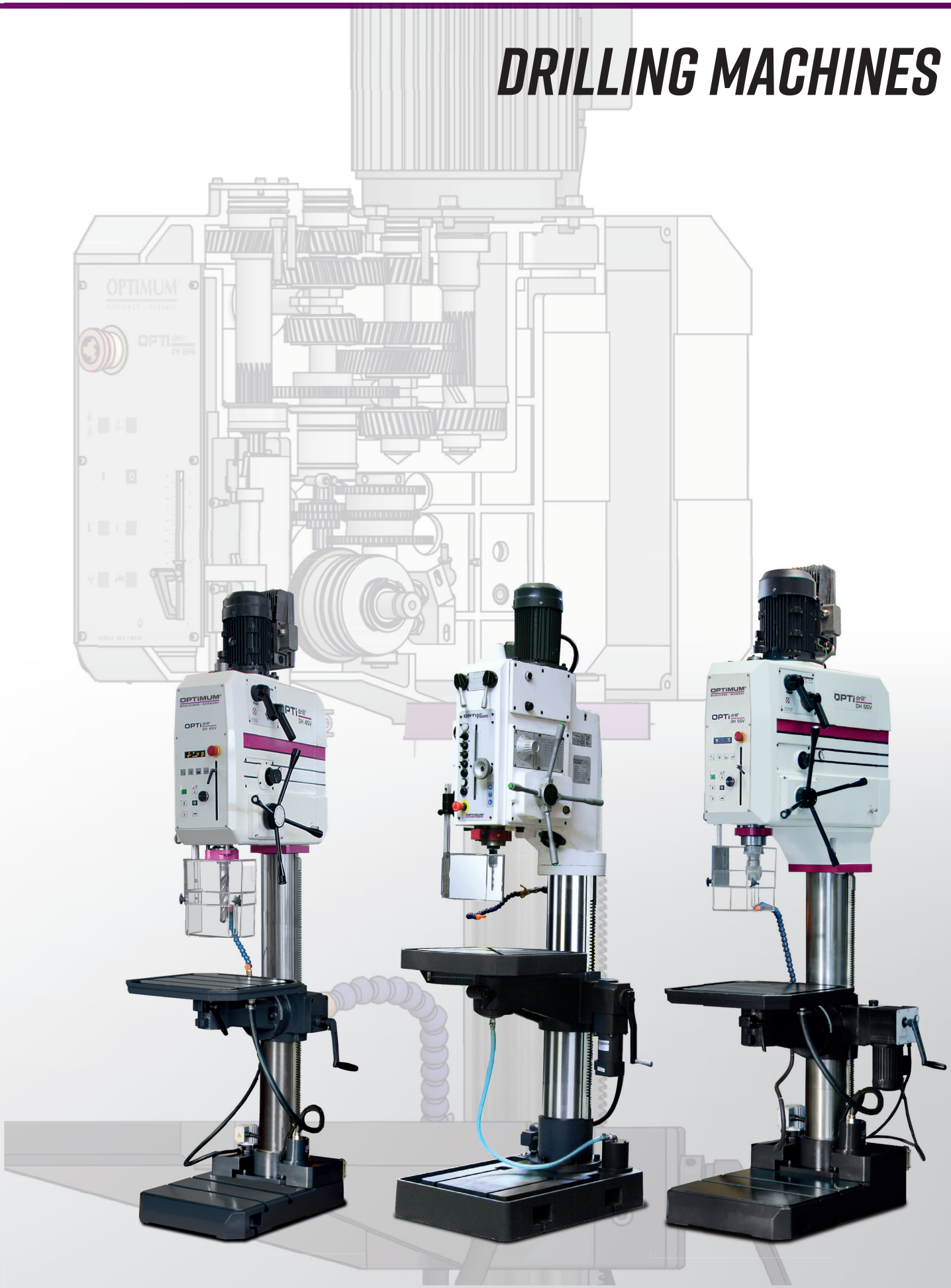

TRADES

Universal column gearbox drill with 12 speeds for milling and drilling.

DH 40GP with automatic spindle sleeve feed

Facts that impress in terms of quality, performance and price

- Heavy, solid cast design
- Smooth action due to polished gearwheels running in an oil sump
- Two-stage industrial electric motor
- Thread tapping function
- Gear head and table are height adjustable
- Large speed range from 95 - 3 200 rpm thanks to 12 switchable speeds
- Generously dimensioned, solid drilling table, precision workmanship, with 2 diagonal T-slots and recirculating coolant duct, strong reinforcing ribs on rear side and double clamping
- Drilling depth stop
- Height-adjustable chuck protection with micro switch for greatest possible protection of the user
- Coupling for switching over from manual rough to manual fine feed
- Thick walled cast column for high force absorption and stability
- Solid baseplate with precision surface finish can be used as a workspace for particularly high workpieces by swivelling out the drilling table

OPTIdrill DH 40GP

- Automatic and manual spindle sleeve feed

DH 40GP
Automatic spindle sleeve feed



› Drilling depth stop adjustable within range of 0-120 mm. The feed is automatically switched off after reaching the preset drilling depth and turned back to its original position by the spring force of the return spring

Gearhead



› Pivots through ±45° to side

Height adjustment

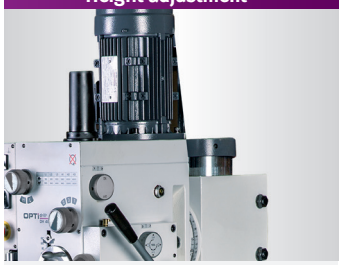

› Drilling head height adjustment 0 - 265 mm



Fig.: DH 40GP

GEAR

Technical specifications, accessories and dimensions

Model	DH 40G	DH 40GP
Article no.	3034355	3034360
Output		
Electrical connection	400 V / 3 Ph ~50 Hz	
Motor output	1.1 / 1.5 kW	
Drilling performance		
Drilling performance in steel (S235JR)	Ø 32 mm	
Continuous drilling performance steel (S235JR)	Ø 25 mm	
Thread tapping steel (S235JR)	M16	
Spindle		
Spindle sleeve stroke	120 mm	
Spindle sleeve diameter	75 mm	
Spindle holder	MT 4	
Throat	280 mm	
Spindle sleeve feed	manual	automatic 0.10 / 0.18 / 0.26 mm/rev
Drilling head pivots/rotates	± 45° / 360°	
Drilling head height adjustment	265 mm	
Rotational speeds		
Spindle speeds	95 - 3 200 rpm	
Speeds	2 x 6 speeds	
Drilling table		
Length x width	500 x 460 mm	
T-slot size	14 mm, 2 diagonal	
Cross table load bearing capacity	50 kg	
Drill table pivots to side/rotates	± 90° / 360°	
Max. distance spindle - drilling table	715 mm	
Machine base		
Machine base work area L x W	650 - 450 mm	
T-slot size/distance/amount	14 mm / 230 mm / 2	
Clearance spindle - machine base	max. 1 180 mm	
Dimensions and weight		
Column diameter	Ø 115 mm	
Length x width x height	595 x 700 x 2,050 mm	
Net weight	320 kg	335 kg

Dimensions

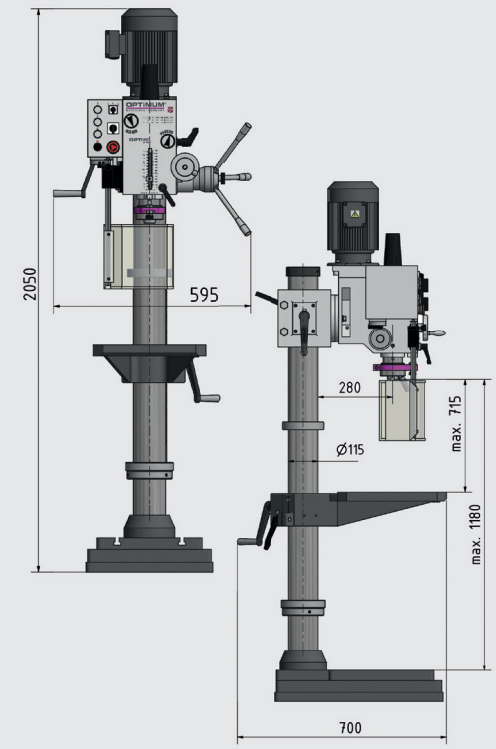

Dimensions DH 40GP

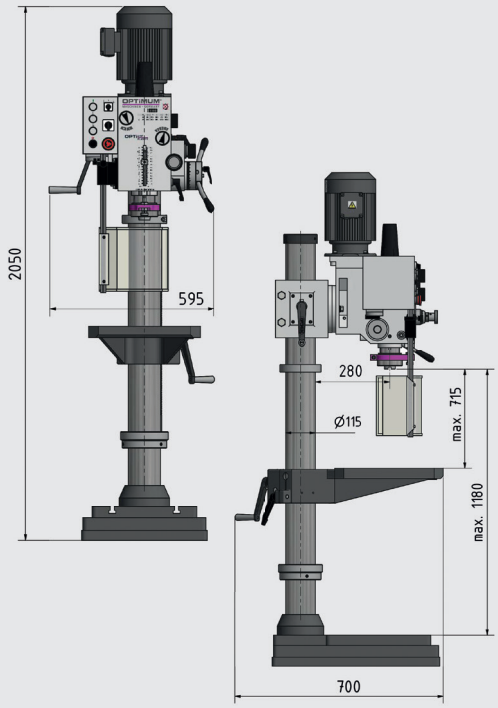

Accessories	Article no.
Assortment of clamping tools size 12, 58-part size	3352017
Twist drill bits HSS-CO 5%, 25 parts	3201010
Twist drill bits HSS-CO 5%, 51 parts	3201020
Twist drill bits HSS-CO 5%, 41 parts	3201021
Universal coolant unit	3351999
Coolant mist lubricator MMC 1 with magnetic holder	3356663
Direct quick release chuck 1 - 16 mm	3050574
Reduction sleeve MT 4 - MT 3	3050664
Morse taper MT 4/B16	3050661

For a large selection of machine vises see on page 93
› More accessories for drills from page 86

Contents of package

› Quick clamping drill chuck 1 - 13 mm
› Morse taper MT 4/B16
› Tie rod M16
› Adapter MT 4 - MT 3
› Operating tool

TRADES

Column gear drilling machines with cross table.

The versatile machines for milling and drilling. DH 40CTP with automatic spindle sleeve feed

Facts that impress in terms of quality, performance and price

- Heavy, solid cast design
- Smooth action due to polished gearwheels running in an oil sump
- Large speed range of 95 - 3 200 rpm
- Two-stage industrial quality electric motor
- Generously dimensioned, solid cross table with precision surface finish, adjustable via 3 hand wheels, includes integrated length scale
- Adjustable end stops on the cross table
- Gear head and table are height adjustable
- Table guideways precisely adjustable via V-ledges
- Solid baseplate with precision surface finish can be used as a workspace for particularly high workpieces by swivelling out the cross table
- Right-handed/left-handed rotation
- Drilling depth stop
- Thread tapping function

OPTIdrill DH 40CTP

- Automatic spindle sleeve feed

DH 40CTP
Automatic spindle sleeve feed



› Drilling depth stop adjustable within range of 0-120 mm. The feed is automatically switched off after reaching the preset drilling depth and turned back to its original position by the spring force of the return spring

Gearhead



› ± 45° pivoting

Cross table



› Generously dimensioned and solid
› Precise surface finish
› Precise positioning is possible during drilling and milling due to the movable X and Y axis.

Follow this for the video presentation of our Optimum DH 40CT gear drilling machine



Fig.: DH 40CTP

Technical specifications, accessories and dimensions

GEAR

Model	DH 40CT	DH 40CTP
Article no.	3034350	3034351
Output		
Electrical connection	400 V / 3 Ph ~50 Hz	
Motor output	1.1 / 1.5 kW	
Drilling/milling output		
Drilling performance in steel (S235JR)	Ø 32 mm	
Continuous drilling performance steel (S235JR)	Ø 25 mm	
Max. sensor head size	Ø 76 mm	
Max. shaft milling cutter size	Ø 25 mm	
Thread tapping steel (S235JR)	M16	
Spindle		
Spindle sleeve stroke	120 mm	
Spindle sleeve diameter	75 mm	
Spindle holder	MT 4	
Throat	280 mm	
Spindle sleeve feed	manual	automatic 0.10 / 0.18 / 0.26 mm/rev
Drawbar	M16	
Spindle head pivots to side/rotates	± 45° / 360º	
Drilling head height adjustment	260 mm	
Rotational speeds		
Spindle speeds	95 - 3 200 rpm	
Speeds	2 x 6 speeds	
Cross table		
Workspace length x width	730 x 210 mm	
T-slot size/amount/distance	14 mm / 3 / 63 mm	
Cross table load bearing capacity	50 kg	
Clearance spindle to table max.	600 mm	
X-axis travel stroke manual	480 mm	
Y-axis travel stroke manual	180 mm	
Y-axis travel stroke manual	560 mm	
Machine base		
Machine base work area L x W	495 x 375 mm	
T-slot size/distance/amount	14 mm / 230 mm / 2	
Clearance spindle - machine base	max. 1 180 mm	
Dimensions and weight		
Column diameter	Ø 115 mm	
Length x width x height	1 060 x 745 x 2 090 mm	
Net weight	370 kg	

Dimensions

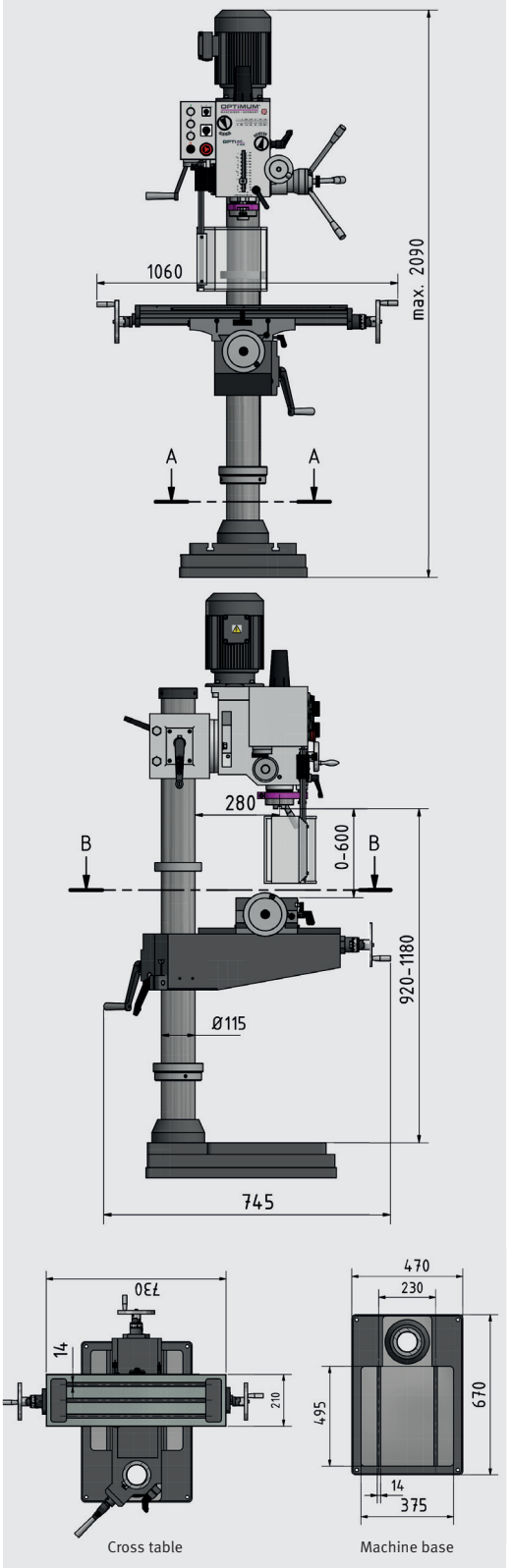

Accessories	Article no.
Assortment of clamping tools size 12, 58-part size	3352017
Hold-down device 14 mm/M12	3352031
Parallel shim set, 20-part	3354001
Horizontal-vertical rotary indexing table RT 150	3356150
Universal coolant unit	3351999

For a large selection of machine vises see oon page 93

› More accessories for drills from page 86
› Coolant accessories see page 320

Contents of package

- › Gear rim drill chuck 1 - 13 mm / B18
- › T-slot nuts
- › Reduction sleeve MT 4 - MT 3
- › Arbor for drill chuck MT 4 / B18
- › Operating tool

TRADES

Bench and upright drills with polyamide gearwheels.
Installation of an optional footswitch possible with DH 32GS

Facts that impress in terms of quality, performance and price

- Heavy, solid cast design
- Excellent concentricity thanks to hardened and polished main spindle
- Low-maintenance, grease-lubricated gearbox
- Gearbox with PA6 gearwheels
- Large speed range
- Generously dimensioned, height adjustable protective screen with safety switch for greatest possible user protection
- Adjustable drilling depth stop with millimetre scale
- Right-handed/left-handed rotation
- Machine lamp integrated in drilling head
- Integrated push-out tool for easy tool changes
- Precision machined drilling table with 2 diagonal T-slots, and recirculating coolant duct
- Thick walled cast column for high force absorption and stability
- Solid baseplate, large dimensions und pronounced ribbing on rear

OPTIdrill DH 32GS

- Thread tapping function
- Automatic spindle sleeve feed
- Coolant system and chip filter in line with Machinery Directive
- Optional footswitch available for toggling between right-handed/ left-handed run and for thread tapping (Article no. 3050032)

DH 32GS
Automatic spindle sleeve feed

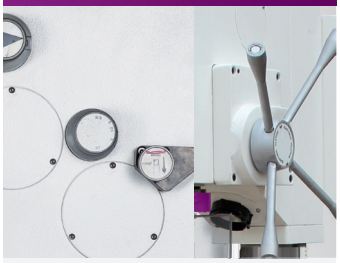

› Activation by pressure switch in spindle sleeve lever. An electromagnetic clutch provides propulsion. The unit is deactivated using the drilling depth stop or by once again pressing the button in the spindle sleeve lever.

Integrated push-out tool



› for simple tool changes

Thermdrill



› Information on page 94



Figure: DH 26GT with optional chuck



Figure: DH 32GS with optional chuck

Technical data and accessories

GEAR

Model	DH 26GT	DH 28GS	DH 32GS
Article no.	3034220	3034230	3034240
Output			
Electrical connection	400 V / 3 Ph ~50 Hz	400 V / 3 Ph ~50 Hz	400 V / 3 Ph ~50 Hz
Motor output	1.1 / 1.5 kW	1.1 / 1.5 kW	1.5 / 2.2 kW
Coolant pump motor	-	-	40 W
Drilling performance			
Drilling performance in steel (S235JR)	Ø 24 mm	Ø 26 mm	Ø 30 mm
Continuous drilling performance steel (S235JR)	Ø 21 mm	Ø 23 mm	Ø 26 mm
Thread tapping steel (S235JR)	-	-	M 16 x 2 mm
Spindle			
Spindle sleeve stroke	127 mm	127 mm	125 mm
Spindle holder	MT 3	MT 3	MT 4
Throat	235 mm	260 mm	285 mm
Automatic spindle sleeve feed	-	-	2 speeds: 0.05 mm / 0.1 mm
Rotational speeds			
Spindle speeds	75 - 2 900 rpm	75 - 2 900 rpm	75 - 2 000 rpm
Number of speeds	8 speeds	8 speeds	8 speeds
Drilling table			
Workspace drilling table length x width	380 x 380 mm	376 x 394 mm	400 x 420 mm
T-slot size	14 mm, 2 diagonal	14 mm, 2 diagonal	14 mm, 2 diagonal
Drilling table load bearing capacity	80 kg	100 kg	120 kg
Rotating drilling table	360°	360°	360°
Max. distance spindle - drilling table	450 mm	875 mm	820 mm
Machine base			
Machine base work area L x W	350 x 356 mm	350 x 356 mm	450 x 395 mm
T-slot size/distance/amount	14 mm / 120 mm / 2	14 mm / 120 mm / 2	14 mm / 150 mm / 2
Max. distance spindle - machine base	610 mm	1,285 mm	1,270 mm
Dimensions and weight			
Column diameter	Ø 92 mm	Ø 92 mm	Ø 115 mm
Length x width x height	610 x 380 x 1 430 mm	640 x 376 x 2 080 mm	725 x 450 x 2 200 mm
Net weight	158 kg	175 kg	312 kg

Accessories	Article no.
Assortment of clamping tools size 12, 58-part	3352017
Quick clamping drill chuck 1 - 8 mm; B16	3050608
Quick clamping drill chuck 1 - 10 mm; B16	3050610
NEW **Quick-action drill chuck DKC 13,** 0 - 13 mm	3050632
NEW **Quick-action drill chuck DKC 16,** 0 - 16 mm	3050633
Twist drill bits HSS-CO 5%, 25 parts	3201010
Twist drill bits HSS-CO 5%, 51 parts	3201020
Twist drill bits HSS-CO 5%, 41 parts	3201021
Thermdrill Basic Set	3060004

For a large selection of machine vises see oon page 93
› More accessories for drills from page 86
› Coolant accessories see page 320

Accessories DH 26GT / DH 28GS	Article no.
Direct quick release chuck 1-16 mm	3050573
Morse taper MT 3/B16	3050660
Reduction sleeve MT 3 - MT 2	3050663
Twist drill HSS MT 3	3051003
Thread tapping chuck MT 3, M3 - M12	3050705
Thread tapping chuck MT 3, M8 - M20	3050706
Universal coolant unit	3351999

Accessories DH 32GS	Article no.
Direct quick release chuck 1-16 mm	3050574
Morse taper MT 4/B16	3050661
Reduction sleeve MT 4 - MT 3	3050664
Reduction sleeve MT 4 - MT 2	3050665
Foot switch	3050032

Functions:
› Thread tapping
› Clockwise/anti-clockwise change over switch



Contents of package
› Morse taper MT

TRADES

Post drills with SIEMENS inverter technology and polyamide gearwheels.

With continuously adjustable speed control. Installation of an optional footswitch possible

Facts that impress in terms of quality, performance and price

- Heavy, solid cast design
- Frequency converter,
- Thread tapping function
- Smooth action thanks to polished multi-tooth carrier
- Excellent concentricity thanks to hardened and polished main spindle
- Low-maintenance, grease-lubricated gearbox
- Gearbox with PA6 gearwheels
- Large speed range
- Generously dimensioned, height adjustable protective screen with safety switch for greatest possible user protection
- Adjustable drilling depth stop with millimetre scale
- Right-handed/left-handed rotation
- Machine lamp integrated in drilling head
- Integrated push-out tool for easy tool changes
- Precision machined drilling table with two diagonal T-slots with all-around cooling water channel
- Thick walled cast column for high force absorption and stability
- Solid baseplate, large dimensions und pronounced ribbing on rear
- Optional footswitch available for toggling between clockwise/anticlockwise run and for thread tapping (Article no. 3050032)

OPTIdrill DH 32GSV

- Automatic spindle sleeve feed
- Coolant system and chip filter in line with machinery directive

DH 32GSV
Automatic spindle sleeve feed



› Activation by pressure switch in spindle sleeve lever. An electromagnetic clutch provides propulsion. The unit is deactivated using the drilling depth stop or by once again pressing the button in the spindle sleeve lever.

SIEMENS
SINAMICS V20



› Energy-saving features
› Advanced cooling
› Painted electronics assemblies

Panel



› Easily readable digital display for speed
› User-friendly membrane keyboard

Thermdrill



› Information on page 94

YouTube
Follow this for the video presentation of our Optimum DH 32GSV gear drilling machine



Figure: DH 28GSV with optional chuck

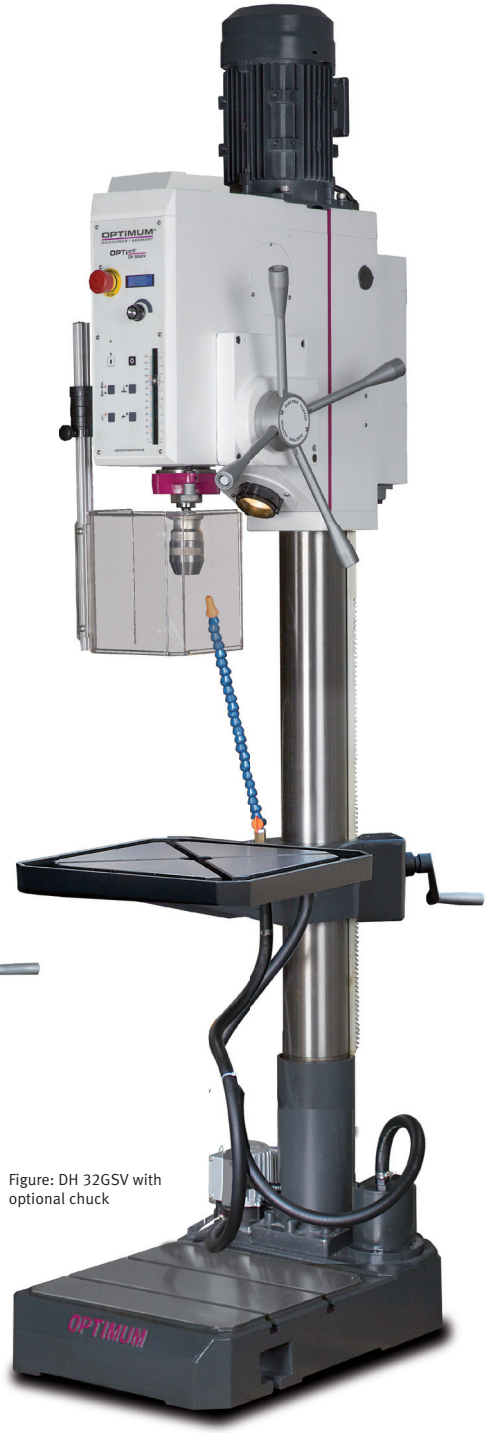

Figure: DH 32GSV with optional chuck

Technical specifications, accessories and dimensions

Model	DH 28GSV	DH 32GSV
Article no.	3034235	3034245
Output		
Electrical connection	400 V / 3 Ph ~50 Hz	
Motor output	1.5 kW	2.2 kW
Coolant pump motor	-	40 W
Drilling performance		
Drilling performance in steel (S235JR)	Ø 26 mm	Ø 30 mm
Continuous drilling performance steel (S235JR)	Ø 23 mm	Ø 26 mm
Thread tapping steel (S235JR)	M 16 x 2 mm	
Spindle		
Spindle sleeve stroke	127 mm	125 mm
Spindle holder	MT 3	MT 4
Throat	260 mm	285 mm
Automatic spindle sleeve feed	-	0.05 / 0.1 mm
Rotational speeds		
Spindle speeds	45 - 3 200 rpm	40 - 3 000 rpm
Number of speeds	4 speeds, electronically controlled	
Drilling table		
Drilling table workspace L x W	376 x 394 mm	400 x 420 mm
T-slot size	14 mm, 2 diagonal	
Drilling table load bearing capacity	100 kg	120 kg
Rotating drilling table	360°	
Max. distance spindle - drilling table	875 mm	820 mm
Machine base		
Machine base work area L x W	350 x 356 mm	420 x 395 mm
T-slot size/distance/amount	14 mm / 120 mm / 2	14 mm / 150 mm / 2
Clearance spindle - machine base	max. 1 285 mm	max. 1 270 mm
Dimensions and weight		
Column diameter	Ø 92 mm	Ø 115 mm
Length x width x height	690 x 375 x 2 080 mm	820 x 450 x 2 230 mm
Net weight	184 kg	324 kg

Dimensions

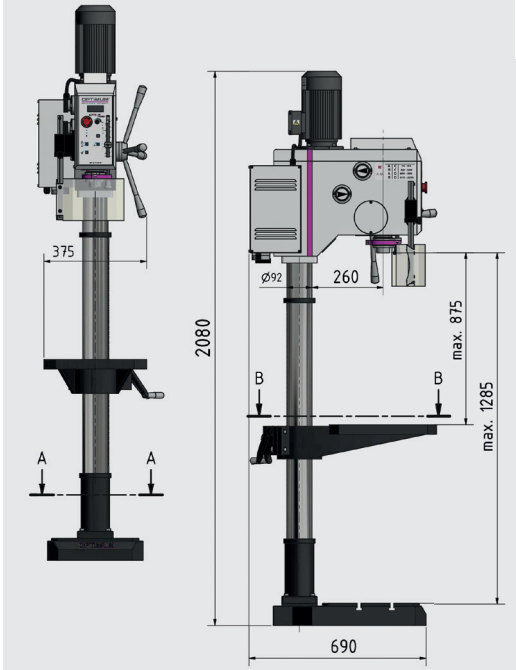

Dimensions

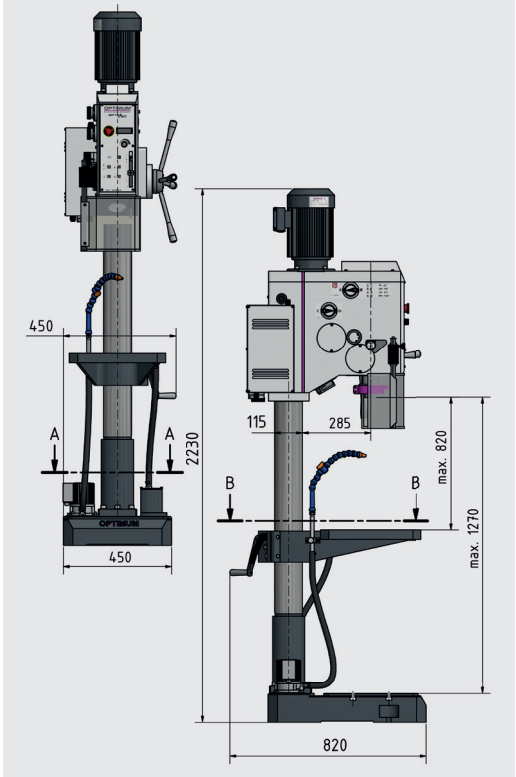

Accessories	Article no.
Assortment of clamping tools size 12, 58 parts	3352017
Quick clamping drill chuck 1 - 8 mm; B16	3050608
Quick clamping drill chuck 1 - 10 mm; B16	3050610
NEW **Quick-action drill chuck DKC 13,** 0 - 13 mm	3050632
NEW **Quick-action drill chuck DKC 16,** 0 - 16 mm	3050633
Twist drill bits HSS-CO 5%, 25 parts	3201010
Twist drill bits HSS-CO 5%, 51 parts	3201020
Twist drill bits HSS-CO 5%, 41 parts	3201021
Thermdrill Basic Set	3060004
Foot switch	3050032



Functions: Right-handed/left-handed rotation for thread tapping

Accessories DH 28GSV	Article no.
Direct quick release chuck 1-16 mm	3050573
Morse taper MT 3/B16	3050660
Reduction sleeve MT 3 - MT 2	3050663
Twist drill HSS / MT 3	3051003
Universal coolant unit	3351999

Accessories DH 32GSV	Article no.
Direct quick release chuck 1-16 mm	3050574
Morse taper MT 4/B16	3050661
Reduction sleeve MT 4 - MT 3	3050664
Reduction sleeve MT 4 - MT 2	3050665

Contents of package

› Morse taper MT

*Note: The drilling machines (frequency inverters) comply with the DIN EN 55011 standard Class C2. Important information see page 323

Heavy-duty gearbox drilling machine with thread tapping device.

B 40GSM with electric spindle sleeve feed

Facts that impress in terms of quality, performance and price

- Heavy, solid cast design
- Automatic gearwheel lubrication via oil pump
- Excellent concentricity thanks to hardened and polished main spindle
- Right-handed/left-handed rotation
- Thread tapping device.
- Main switch and motor circuit breaker
- Adjustable drilling depth stop with millimetre scale
- Integrated push-out tool for easy tool changes
- Machine lamp integrated in drilling head
- Precision machined, generously dimensioned drilling table with 2 diagonal T-slots, and recirculating coolant duct
- Coolant system and chip filter in line with Machinery Directive
- Thick walled cast column for high force absorption and stability
- Solid base plate with two parallel T-slots, generously dimensioned and precision surface finish

OPTIdrill B 40 GSM
- Electrical spindle sleeve feed

OPTIdrill B 40GSP
- Manual spindle sleeve feed

Spindle sleeve feed
2 speeds 0.1/0.2 mm/rev

B 40GSM - electrical



› For deep drilling or blind hole drilling, the clutch on the automatic spindle sleeve feed can be released or engaged at any time by pressing the button on the feed handle

B 40GSP - manual



Control cabinet



› Clear-cut layout
› Generously dimensioned
› Certified switches by ABB
› Certified components by SIEMENS or Schneider

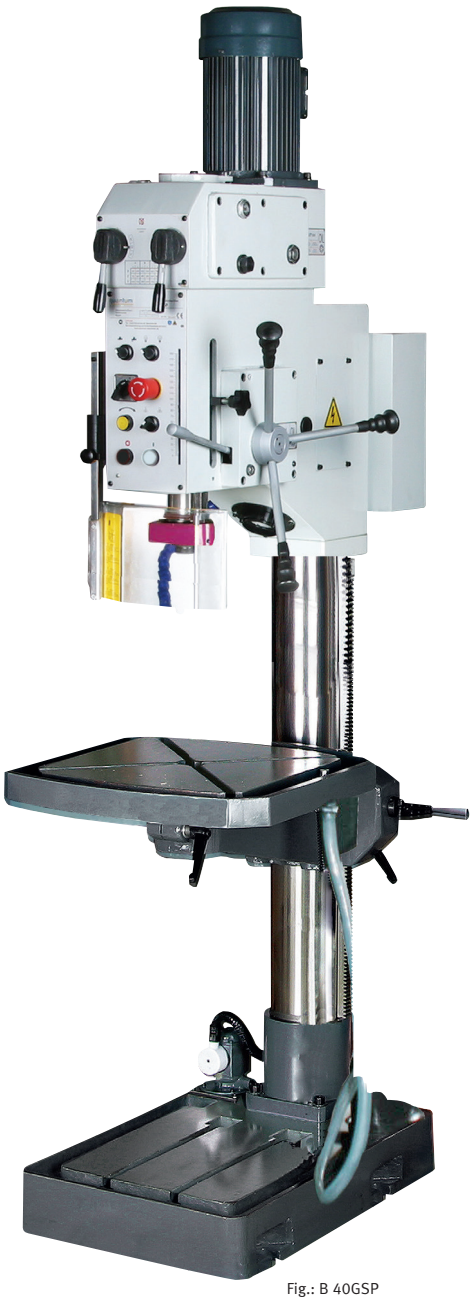

Fig.: B 40GSP

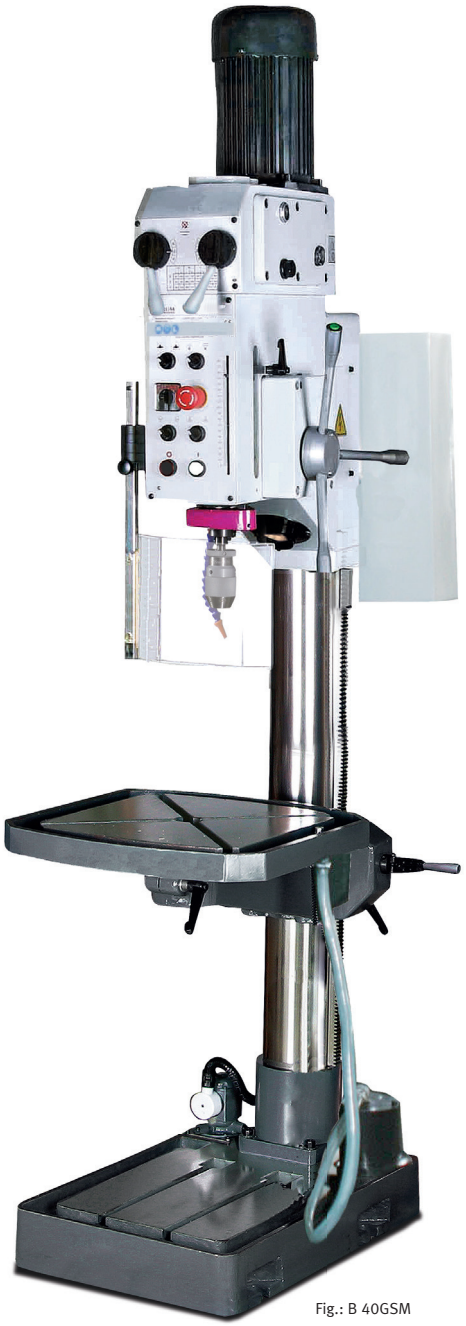

Fig.: B 40GSM

GEAR

Technical specifications, accessories and dimensions

Model	B 40GSP	B 40GSM
Article no.	3034403	3034400
Output		
Electrical connection	400 V / 3 Ph ~50 Hz	
Total rated value	0.85 / 1.5 kW	
Coolant pump motor	40 W	
Drilling performance		
Drilling performance in steel (S235JR)	Ø 35 mm	
Continuous drilling performance steel (S235JR)	Ø 30 mm	
Thread tapping steel (S235JR)	M24	
Spindle holder		
Spindle sleeve stroke	180 mm	
Spindle holder	MT 4	
Throat	350 mm	
Spindle sleeve feed	2 speeds, 0.1/0.2 mm/rev	
Rotational speeds		
Spindle speeds	50 - 1 450 rpm	
Number of speeds	18 speeds	
Drilling table		
Workspace drilling table length x width	560 x 560 mm	
T-slot size	18 mm, 2 diagonal	
Drilling table load bearing capacity	250 kg	
Rotating drilling table	± 90°	
Max. distance spindle - drilling table	780 mm	
Machine base		
Machine base work area L x W	510 x 500 mm	
T-slot size/amount/distance	18 mm / 2 / 150 mm	
Max. distance spindle - machine base	1,320 mm	
Dimensions and weight		
Column diameter	Ø 150 mm	
Length x width x height	935 x 530 x 2 280 mm	
Net weight	465 kg	500 kg

Dimensions

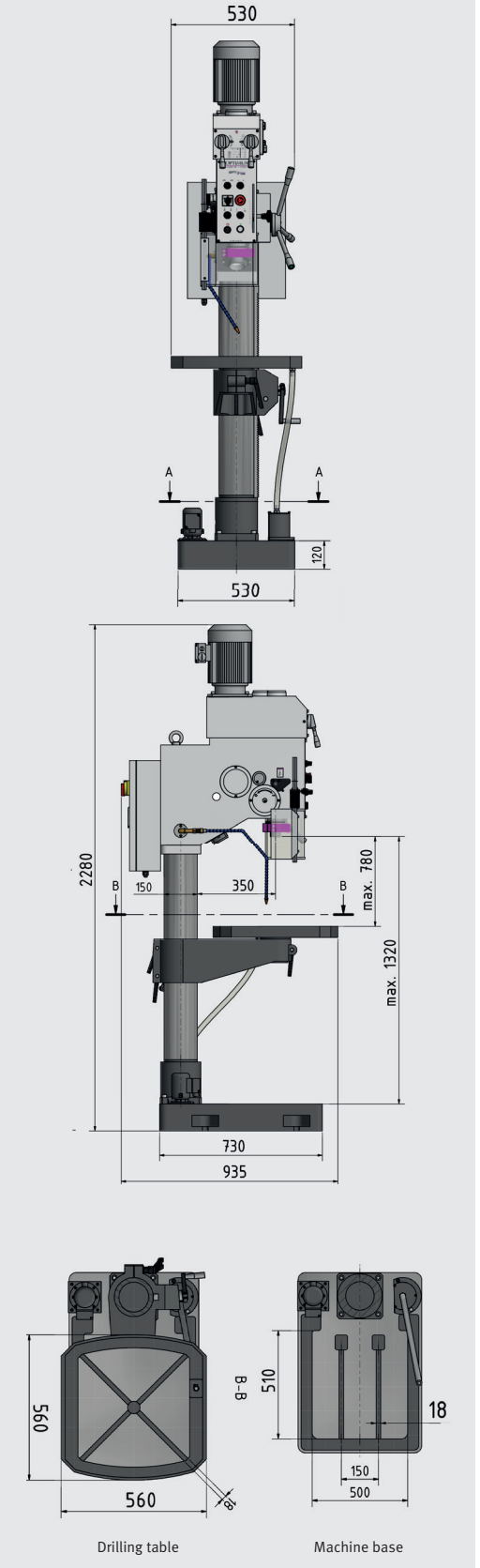

Accessories	Article no.
Assortment of clamping tools size 16, 58-part size	3352019
Hold-down device 14 mm/M12	3352031
Direct quick release chuck MT 4/16 mm	3050574
Twist drill bits HSS-CO 5%, 25 parts	3201010
Twist drill bits HSS-CO 5%, 51 parts	3201020
Twist drill bits HSS-CO 5%, 41 parts	3201021
Reduction sleeve MT 4 - MT 3	3050664

For a large selection of machine vises see on page 93
› More accessories for drills from page 86
› Coolant accessories see page 320

Contents of package
› Quick clamping drill chuck 1 - 16 mm
› Morse taper MT 4/B16

Geared drilling machine with thread tapping unit and electrically controlled spindle sleeve feed DH 35V with continuously adjustable speed control.

Facts that impress in terms of quality, performance and price

- Dirt/water-resistant, easy-to-clean membrane keyboard
- 24 V DC electronics
- Electrical spindle sleeve feed
- Drilling depth stop
- Low-maintenance gear unit running in a closed oil sump
- Thread tapping device.
- Machine lamp integrated in drilling head
- Main switch
- Generously dimensioned, height adjustable protective screen with safety switch for greatest possible user protection
- Generously dimensioned, solid drilling table, precision workmanship, with 2 diagonal T-slots and recirculating coolant duct, strong reinforcing ribs on rear side and double clamping
- Coolant unit with coolant tank integrated into base plate
- Chip filter removes coarse components from the coolant
- Robust, thick-walled cast-iron column for excellent force absorption
- Solid base plate with parallel T-slots, precision surface finish
- Optional footswitch available for toggling between right-handed/left-handed run and for thread tapping (Article no. 3050032)

OPTIdrill DH 35V

- Continuously adjustable speed control
- Pitch deactivation
- Easily readable digital display
- Digitally adjustable drilling and thread depth
- Digital zero point adjustable

DH 35V
SIEMENS SINAMICS G110M



DH 35V
State-of-the-art control solution

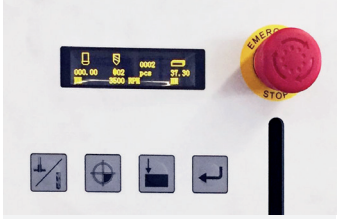

› Easily readable digital display for speed, drilling depth | tapping depth and piece counter
› Feed deactivation via depth adjustment

Automatic spindle sleeve feed



› For deep drilling or blind hole drilling, the clutch on the automatic spindle sleeve feed can be released or engaged at any time by pressing the button on the feed handle



Fig.: DH 35G with optional accessories



Fig.: DH 35V with optional accessories

Technical specifications, accessories and dimensions

Model	DH 35G	DH 35V*
Article no.	3034250	3034252
Output		
Electrical connection	400 V / 3 Ph ~50 Hz	
Motor output	1.5 / 2.2 kW	2.2 kW
Coolant pump motor	40 W	
Drilling performance		
Drilling performance in steel (S235JR)	Ø 35 mm	
Continuous drilling performance steel (S235JR)	Ø 26 mm	
Thread tapping steel (S235JR)	M24	
Spindle		
Spindle sleeve stroke	125 mm	
Spindle holder	MT 4	
Throat	285 mm	
Automatic spindle sleeve feed	3 speeds: 0.05-0.15 mm/rev	
Rotational speeds		
Spindle speeds	75 - 2 000 rpm	30 - 2 950 rpm
Number of speeds	8 speeds	4 speeds, electronically controlled
Drilling table		
Drilling table workspace L x W	400 - 420 mm	
T-slot size	14 mm, 2 diagonal	
Drilling table load bearing capacity	200 kg	
Drill table rotation/lateral pivot	360° / ± 90°	
Clearance spindle - drilling table	65 - 800 mm	
Machine base		
Machine base work area L x W	420 x 395 mm	
T-slot size/distance/amount	14 mm / 150 mm / 2	
Clearance spindle - machine base	max. 1 217 mm	
Dimensions and weight		
Column diameter	Ø 115 mm	
Length x width x height	860 x 474 x 2 175 mm	
Net weight	350 kg	365 kg

Dimensions

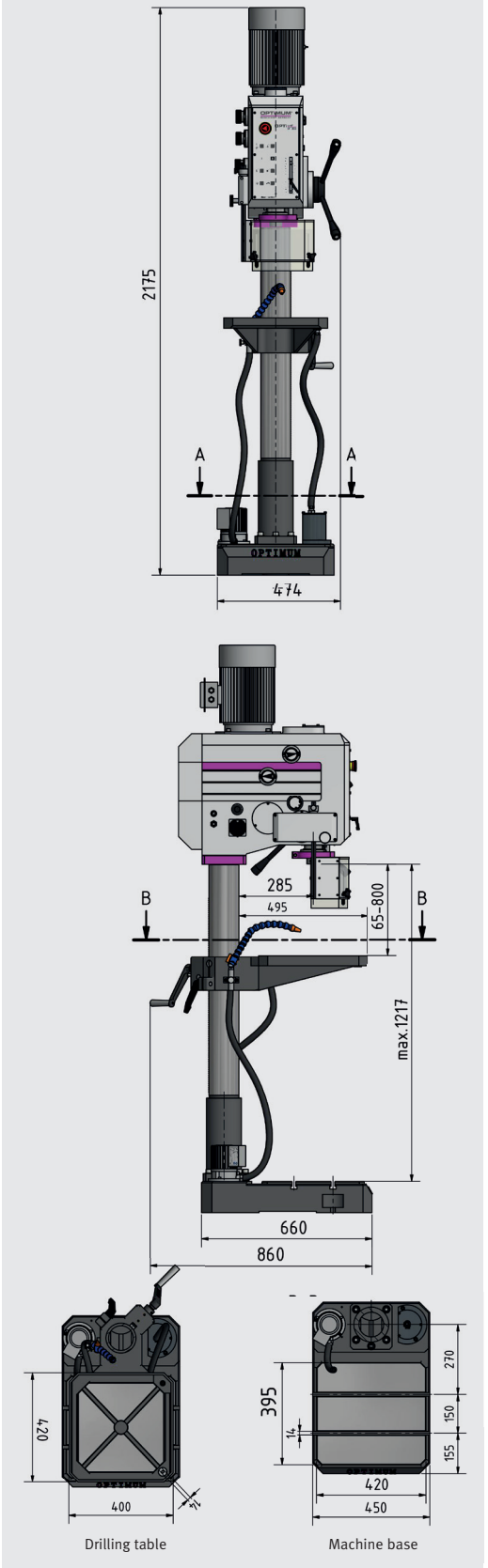

Accessories	Article no.
Assortment of clamping tools size 12, 58-part size	3352017
Blank holder 14 mm/M12	3352031
Twist drill bits HSS-CO 5%, 25 parts	3201010
Twist drill bits HSS-CO 5%, 51 parts	3201020
Twist drill bits HSS-CO 5%, 41 parts	3201021
Direct quick release chuck 1 - 16 mm	3050574
Reduction sleeve MT 4 - MT 3	3050664
Reduction sleeve MT 4 - MT 2	3050665
Blank holder 14 mm	3352031
Thermdrill Basic Set	3060004
Foot switch	3050032
for thread tapping and toggling right-handed/left-handed rotation	



For a large selection of machine vises see oon page 93

› More accessories for drills from page 86
› Coolant accessories see page 320

Contents of package

› Quick clamping drill chuck 1 - 16 mm
› Morse taper MT 4/B16

*Note: The drilling machines (frequency inverters) comply with the DIN EN 55011 standard Class C2. Important information see page 323

Heavy-duty gearbox drilling machine with thread tapping device for industrial applications. DH 45V with continuously adjustable speed control

Facts that impress in terms of quality, performance and price

- Heavy, solid cast design
- Dirt/water-resistant, easy-to-clean membrane keyboard
- 24 V DC electronics
- Mechanical spindle sleeve feed
- Drilling depth stop
- Automatic gearwheel lubrication via oil pump
- Thread tapping device.
- Machine lamp integrated in drilling head
- Main switch
- Generously dimensioned, height adjustable protective screen with safety switch for greatest possible user protection
- Generously dimensioned drilling table, solid, precision workmanship, with parallel T-slots and recirculating coolant duct, reinforcing ribs on rear, rotates through ± 90° about the column, laterally tilting
- Cooling unit and coolant tank, can be removed for easier and complete emptying
- Chip filter in line with Machinery Directive
- Robust, thick-walled cast-iron column for excellent force absorption
- Solid base plate with parallel T-slots, precision surface finish
- Optional footswitch available for toggling between right-handed/left-handed run and for thread tapping (Article no. 3050032)

OPTIdrill DH 45V

- Electrically controlled spindle sleeve feed
- Continuously adjustable speed control
- Feed deactivation programmable
- Easily readable digital display
- Digitally adjustable drilling and thread depth
- Digital zero point adjustable

DH 45V
SIEMENS SINAMICS G110M



DH 45V
State-of-the-art control solution

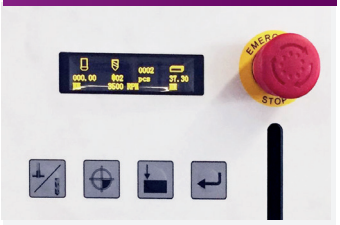

› Easily readable digital display for speed, drilling depth | tapping depth and piece counter
› Feed deactivation via depth adjustment

Integrated push-out tool



› for simple tool changes



Fig.: DH 45G



Fig.: DH 45V with optional accessories

Follow this for the video presentation of our Optimum DH 45G gear drilling machine

GEAR VARIO

Technical specifications, accessories and dimensions

Model	DH 45G	DH 45V*
Article no.	3034255	3034262
Output		
Electrical connection	400 V / 3 Ph ~50 Hz	
Motor output	2.2 kW	
Coolant pump motor	100 W	
Drilling performance		
Drilling performance in steel (S235JR)	Ø 40 mm	
Continuous drilling performance steel (S235JR)	Ø 35 mm	
Thread tapping steel (S235JR)	M35	
Spindle		
Spindle sleeve stroke	170 mm	
Spindle holder	MT 4	
Throat	350 mm	
Automatic spindle sleeve feed	3 speeds: 0.1 / 0.15 / 0.2 mm/rev	
Rotational speeds		
Spindle speeds	90 - 1 520 rpm	30 - 2 430 rpm
Number of speeds	8 speeds	4 speeds, electronically controlled
Drilling table		
Drilling table workspace L x W	530 x 530 mm	
T-slot size/distance/amount	18 mm / 125 mm / 3	
Drilling table load bearing capacity	250 kg	
Drill table rotation/lateral pivot	360° / ± 90°	
Clearance spindle - drilling table	100 - 740 mm	
Machine base		
Machine base work area L x W	435 x 445 mm	
T-slot size/distance/amount	18 mm / 150 mm / 2	
Clearance spindle - machine base	max. 1 210 mm	
Dimensions and weight		
Column diameter	Ø 150 mm	
Length x width x height	880 x 595 x 2 445 mm	
Net weight	530 kg	550 kg

Dimensions

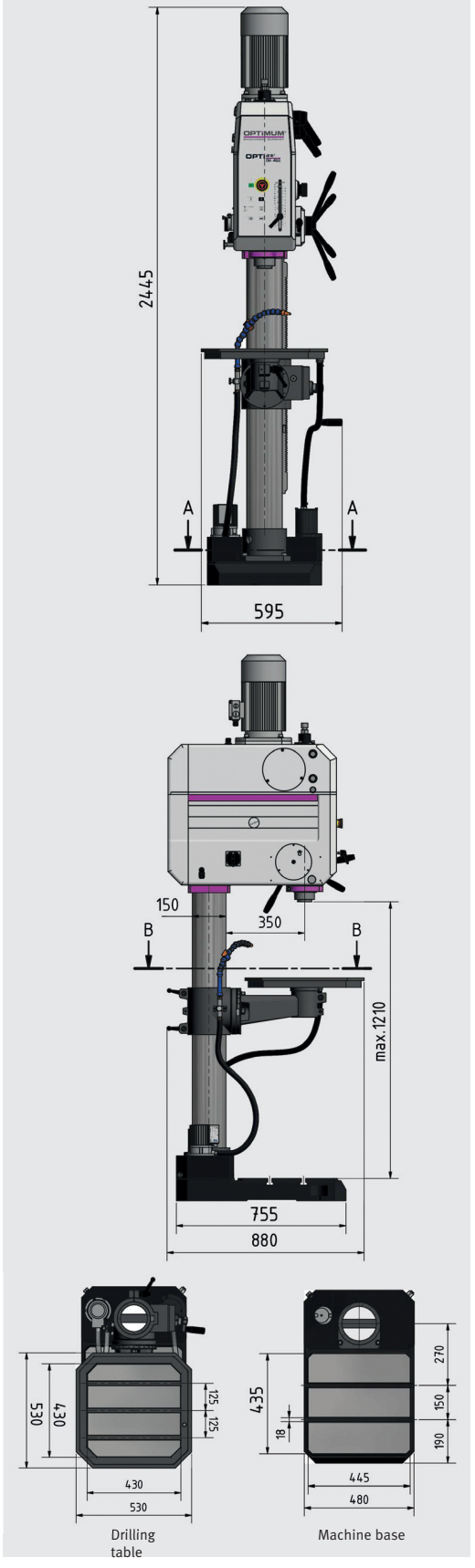

Accessories	Article no.
Assortment of clamping tools size 16, 58-part size	3352019
Assortment of clamping tools size 14, 58-part size	3352018
Twist drill bits HSS-CO 5%, 25 parts	3201010
Twist drill bits HSS-CO 5%, 51 parts	3201020
Twist drill bits HSS-CO 5%, 41 parts	3201021
Direct quick release chuck 1 - 16 mm	3050574
Reduction sleeve MT 4 - MT 3	3050664
Reduction sleeve MT 4 - MT 2	3050665
Blank holder 14 mm	3352031
Thermdrill Basic Set	3060004
Foot switch	3050032
for thread tapping and toggling right-handed/left-handed rotation	



For a large selection of machine vises see oon page 93

› More accessories for drills from page 86

› Coolant accessories see page 320

Contents of package

› Quick clamping drill chuck 1 - 16 mm

› Morse taper MT 4/B16

*Note: The drilling machines (frequency inverters) comply with the DIN EN 55011 standard Class C2. Important information see page 323

INDUSTRY

Heavy duty gearbox drill for industrial use With coolant and thread tapping unit, and automatic spindle sleeve feed

Facts that impress in terms of quality, performance and price

- Two-stage drive motor
- Heavy, solid cast design
- Excellent concentricity thanks to tempered and ground main spindle
- Right-handed/left-handed rotation
- Automatic gearwheel lubrication via oil pump
- Thread tapping device.
- Main switch and motor circuit breaker
- Machine lamp integrated in drilling head
- Generously dimensioned, height adjustable protective screen with safety switch for greatest possible user protection
- Generously dimensioned drilling table, solid, precision workmanship, with two parallel T-slots and recirculating coolant duct, strong reinforcing ribs on rear, rotates through 360°
- Coolant unit and coolant tank
- Chip filter in line with Machinery Directive
- Extremely stable, thick-walled cast-iron column – column diameter 200 mm – for excellent force absorption
- Solid base plate with two parallel T-slots, precision surface finish

Integrated push-out tool



› Spindle lock with integrated ejector for easy tool change

Automatic spindle sleeve feed



› For deep drilling or blind hole drilling, the clutch on the automatic spindle sleeve feed can be released or engaged at any time by pressing the button on the feed handle

Table height adjustment



› motorised or mechanical

Heavy, solid cast design
950 kg
Smooth action, stable

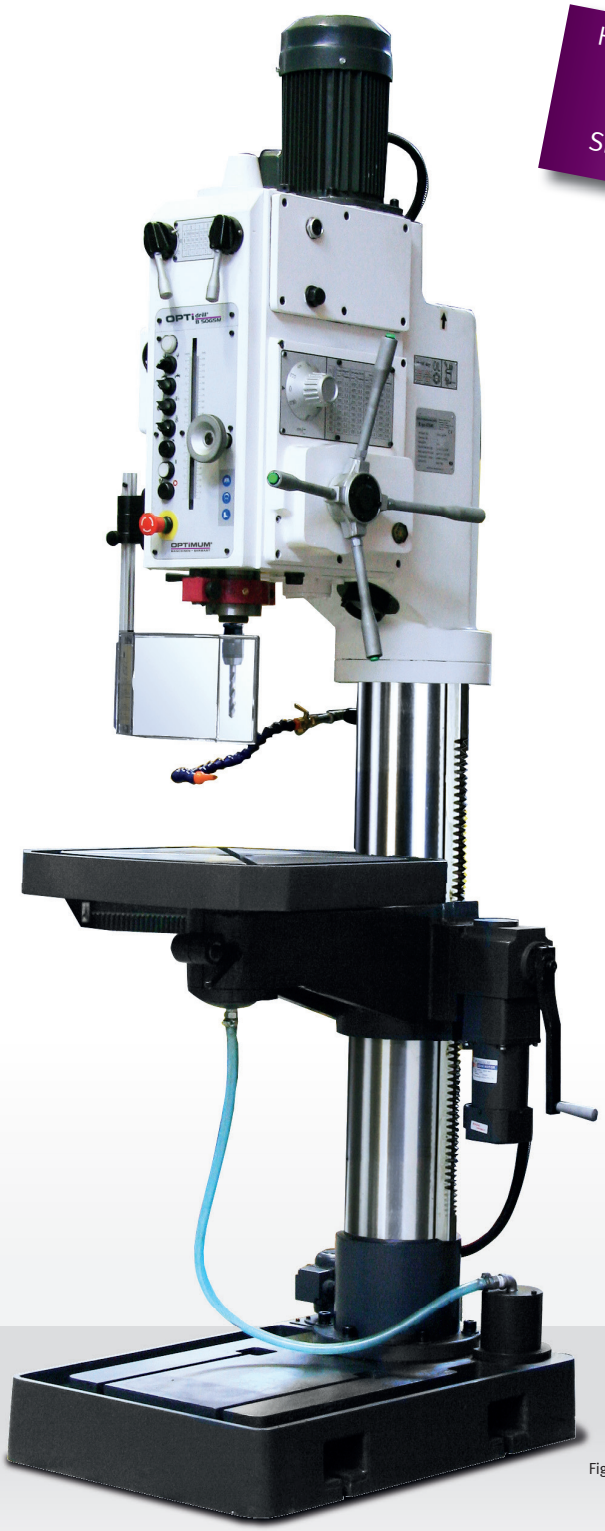

Fig.: B 50GSM

GEAR

Technical specifications, accessories and dimensions

Model	B 50GSM
Article no.	3034500
Output	
Electrical connection	400 V / 3 Ph ~50 Hz
Motor output	2.4/3.0 kW
Coolant pump motor	40 W
Drilling performance	
Drilling performance in steel (S235JR)	Ø 50 mm
Continuous drilling performance steel (S235JR)	Ø 45 mm
Thread tapping steel (S235JR)	M42
Spindle holder	
Spindle sleeve stroke	230 mm
Spindle holder	MT 4
Throat	375 mm
Automatic spindle sleeve feed	6 speeds: 0.05-0.3 mm/rev
Rotational speeds	
Spindle speeds	54 - 2 090 rpm
Number of speeds	18 speeds
Drilling table	
Workspace drilling table length x width	600 x 600 mm
T-slot size	18 mm, 2 diagonal
Drilling table load bearing capacity	300 kg
Drill table rotation/lateral pivot	360° / ± 90°
Max. distance spindle - drilling table	800 mm
Machine base	
Machine base workspace length x width	600 x 520 mm
T-slot size/amount/distance	18 mm / 2 / 280 mm
Max. distance spindle - machine base	1 300 mm
Dimensions and weight	
Column diameter	Ø 200 mm
Length x width x height	985 x 775 x 2 460 mm
Net weight	950 kg

Dimensions

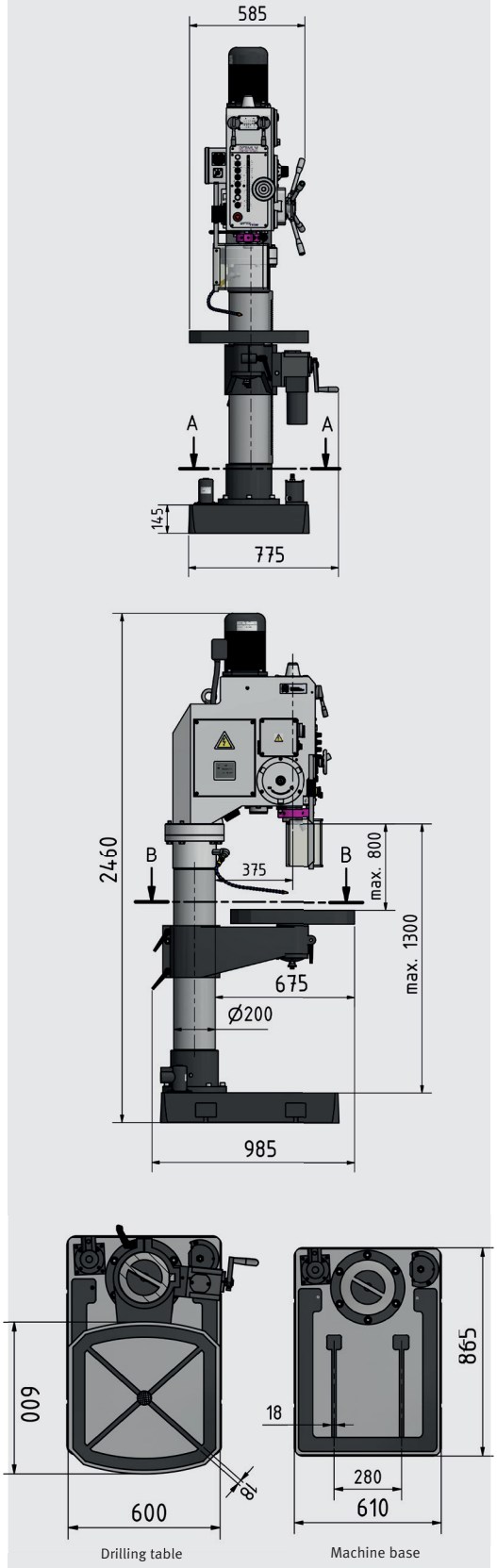

Accessories	Article no.
Assortment of clamping tools size 16, 58-part size	3352019
Hold-down device 18 mm/M16	3352032
Twist drill bits HSS-CO 5%, 25 parts	3201010
Twist drill bits HSS-CO 5%, 51 parts	3201020
Twist drill bits HSS-CO 5%, 41 parts	3201021
Direct quick release chuck 1 - 16 mm	3050574
Reduction sleeve MT 4 - MT 3	3050664
Reduction sleeve MT 4 - MT 2	3050665
Thermdrill Basic Set	3060004

For a large selection of machine vises see oon page 93
› More accessories for drills from page 86
› Coolant accessories see page 320

Contents of package
› Quick clamping drill chuck 1 - 16 mm
› Morse taper MT 4/B16
› T-slot nuts

INDUSTRY

Heavy-duty gear drilling machine with thread tapping device for industrial applications. DH 55V with continuously adjustable speed control

Facts that impress in terms of quality, performance and price

- Heavy, solid cast design
- Dirt/water-resistant, easy-to-clean membrane keyboard
- 24 V DC electronics
- Electrically controlled spindle sleeve feed
- Drilling depth stop
- Automatic gearwheel lubrication via oil pump
- Thread tapping device.
- Generously dimensioned, height adjustable protective screen with safety switch for greatest possible user protection
- Generously dimensioned drilling table, solid, precision workmanship, with three parallel T-slots and recirculating coolant duct, reinforcing ribs on rear, rotates through ± 90° about the column, laterally tilting
- Cooling unit and coolant tank, can be removed for easier and complete emptying
- Integrated push-out tool
- Machine lamp integrated in drilling head
- Chip filter in line with Machinery Directive
- Robust, thick-walled cast-iron column for excellent force absorption
- Solid base plate with two parallel T-slots, precision surface finish
- Optional footswitch available for toggling between clockwise and anticlockwise run and for thread tapping

OPTIdrill DH 55V

- Continuously adjustable speed control
- Adjustable feed deactivation
- Easily readable digital display
- Digitally adjustable drilling and thread depth
- Digital zero point adjustable

DH 55V
SIEMENS SINAMICS G110M



DH 55V
State-of-the-art control solution

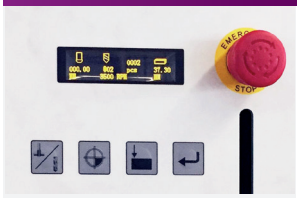

› Easily readable digital display for speed, drilling depth | tapping depth and piece counter
› Feed deactivation via depth adjustment

Membrane keyboard



› Dirt and water resistant
› Easy to clean

Table height adjustment



› motorised or mechanical

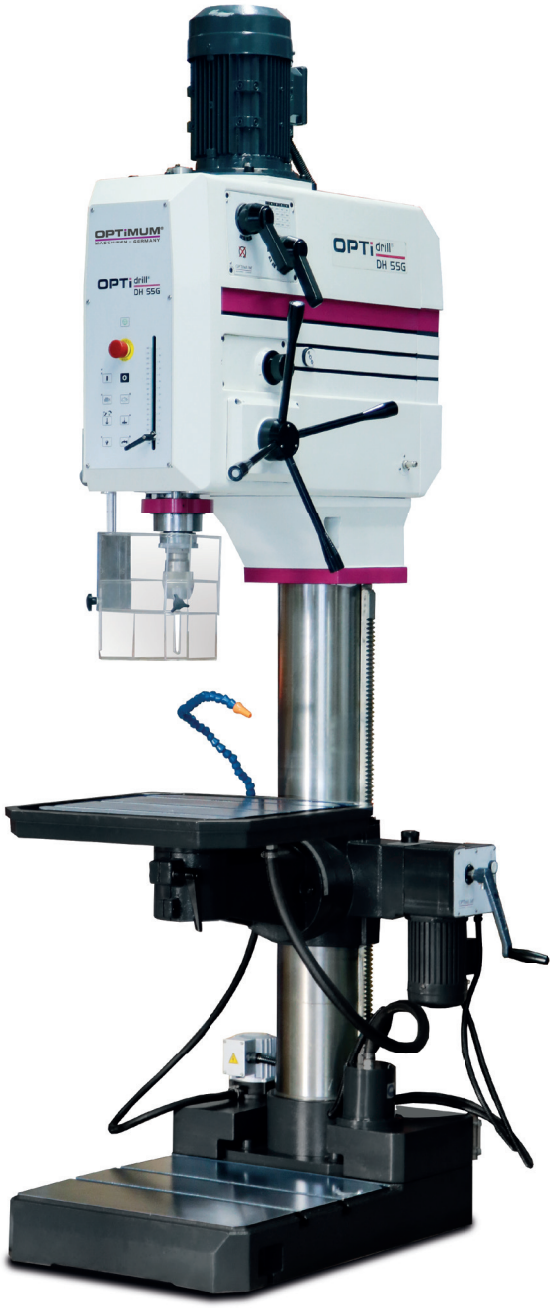

Fig.: DH 55G



Figure: DH 55V

Technical specifications, accessories and dimensions

GEAR VARIO

Model	DH 55G	DH 55V*
Article no.	3034265	3034267
Output		
Electrical connection	400 V / 3 Ph ~50 Hz	
Motor output	2.2 / 2.8 kW	2.8 kW
Coolant pump motor	100 W	
Drilling performance		
Drilling performance in steel (S235JR)	Ø 55 mm	
Continuous drilling performance steel (S235JR)	Ø 50 mm	
Thread tapping steel (S235JR)	M42	
Spindle		
Spindle sleeve stroke	200 mm	
Spindle holder	MT 4	
Throat	400 mm	
Automatic spindle sleeve feed	3 speeds: 0.1 / 0.15 / 0.2 mm/rev	
Rotational speeds		
Spindle speeds	45 - 2 000 rpm	10 - 3 000 rpm
Number of speeds	16 speeds	4 speeds, elec. control
Drilling table		
Drilling table workspace L x W	600 x 600 mm	
T-slot size/distance/amount	18 mm / 160 mm / 3	
Drilling table load bearing capacity	350 kg	
Drill table rotation/lateral pivot	360° / ± 90°	
Clearance spindle - drilling table	130 - 725 mm	
Machine base		
Machine base work area L x W	515 x 570 mm	
T-slot size/distance/amount	18 mm / 150 mm / 2	
Clearance spindle - machine base	max. 1 300 mm	
Dimensions and weight		
Column diameter	Ø 200 mm	
Length x width	850 x 1,060 mm	
height	2,500 mm	2,545 mm
Net weight	850 kg	907 kg

Dimensions

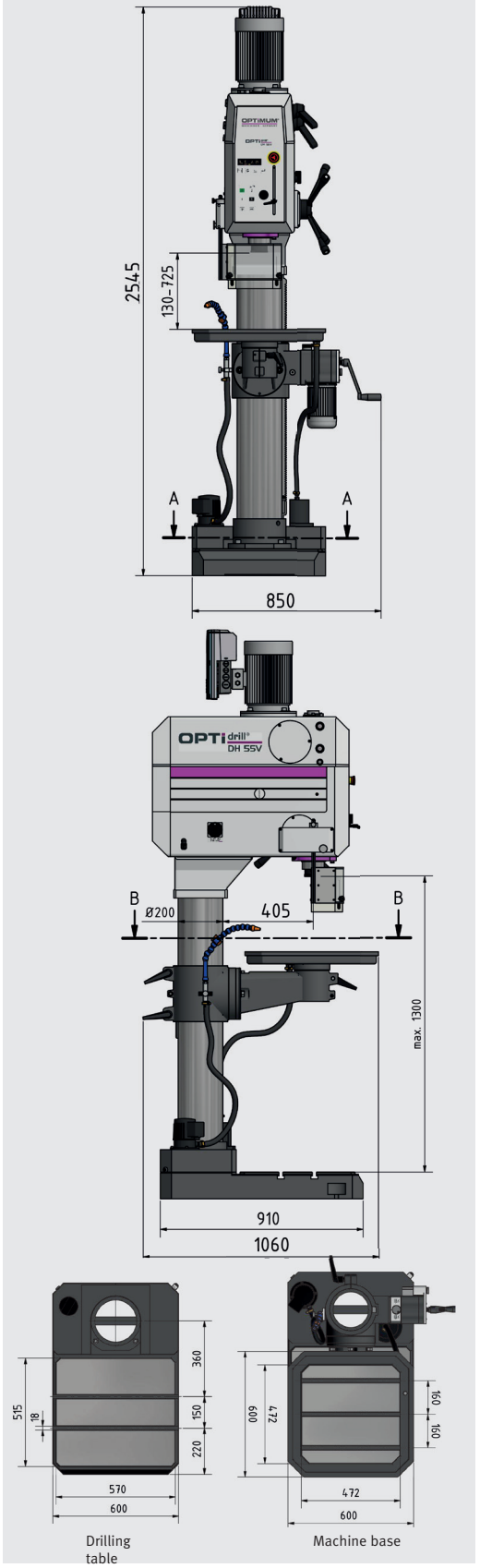

Drilling table

Machine base

Accessories	Article no.
Assortment of clamping tools size 16, 58-part size	3352019
Twist drill bits HSS-CO 5%, 25 parts	3201010
Twist drill bits HSS-CO 5%, 51 parts	3201020
Twist drill bits HSS-CO 5%, 41 parts	3201021
Direct quick release chuck 1 - 16 mm	3050574
Reduction sleeve MT 4 - MT 3	3050664
Reduction sleeve MT 4 - MT 2	3050665
Blank holder 14 mm	3352031
Thermdrill Basic Set	3060004
Foot switch	3050032
for thread tapping and toggling right-handed/left-handed rotation	

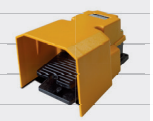

For a large selection of machine vises see Oon page 93

› More accessories for drills from page 86
› Coolant accessories see page 320

Contents of package

› Quick clamping drill chuck 1 - 16 mm
› Morse taper MT 4/B16

*Note: The drilling machines (frequency inverters) comply with the DIN EN 55011 standard Class C2. Important information see page 323.

RADIAL DRILLING MACHINES



Visit our exhibition in Hallstadt/Bamberg

OPTIMUM®
MASCHINEN - GERMANY

DRILLING MACHINES



DIY

Lightweight radial drilling machine with long outreach
for wood, plastics, aluminium

Facts that impress in terms of quality, performance and price

- Best possible force transmission thanks to to aluminium pulleys in combination with GATES quality toothed belts
- Guaranteed concentricity of drilling spindle better than 0.03 mm measured in the drilling spindle
- Height-adjustable chuck protection with micro switch for best possible user protection
- Drill spindle with precision ball bearings
- V-belt cover with safety switch
- Precision drilling table with fastening holes for extended drilling table support
- Steel column for extremely smooth action and stability
- Solid and generously dimensioned baseplate with grooves for T slot nuts, rear with pronounced ribbing
- User-friendly safety switch with IP 54 degree of protection
- Separate emergency stop push button
- Drilling depth stop
- OPTIMUM key type drill chuck in standard scope of delivery
- Optimal price-performance ratio
- Lasting value

Throat



› Variable from 115 to 430 mm by shifting the drilling head

Drilling head



› pivots laterally through ± 45°

Drilling table



› Precise workmanship
› Diagonal T-slots
› Circumferential coolant channel
› Pivots to side ± 45°



Fig.: RB 6T



Fig.: RB 8S

Technical specifications, accessories and dimensions

BELT

Model	RB 6T	RB 8S
Article no.	3009161	3009181
Output		
Electrical connection	230 V / 1 Ph ~50 Hz	
Motor output	750 W	
Drilling performance		
Drilling performance in steel (S235JR)	Ø 16 mm	
Continuous drilling performance steel (S235JR)	Ø 12 mm	
Spindle		
Spindle sleeve stroke	80 mm	
Spindle holder	MT 2	
Throat	115 - 430 mm	
Rotational speeds		
Spindle speeds	390 - 3 000 rpm	
Number of speeds	5 speeds	
Drilling table		
Workspace length x width	225 x 230 mm	262 x 262 mm
T-slot size	-	14 mm, diagonal
Groove size	14 mm	-
Drill table rotation/lateral pivot	360° / ± 45°	
Max. distance spindle - drilling table	380 mm	740 mm
Machine base		
Machine base work area L x W	430 x 260 mm	600 x 350 mm
Slot size / distance / amount	14 mm / 130 mm / 2	14 mm / 220 mm / 2
Clearance spindle - machine base	max. 550 mm	max. 1 250 mm
Dimensions and weight		
Column diameter	Ø 60 mm	Ø 70 mm
Length x width x height	820 x 335 x 930 mm	820 x 395 x 1 640 mm
Net weight	47 kg	60 kg

Dimensions RB 6T

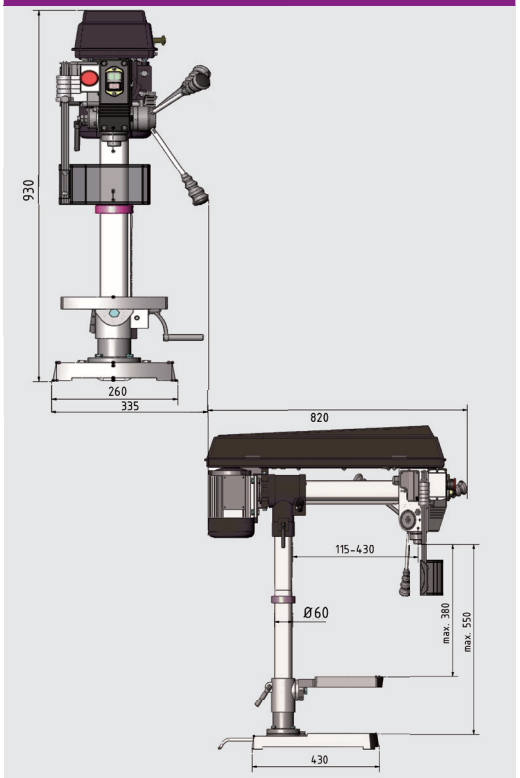

Dimensions RB 8S

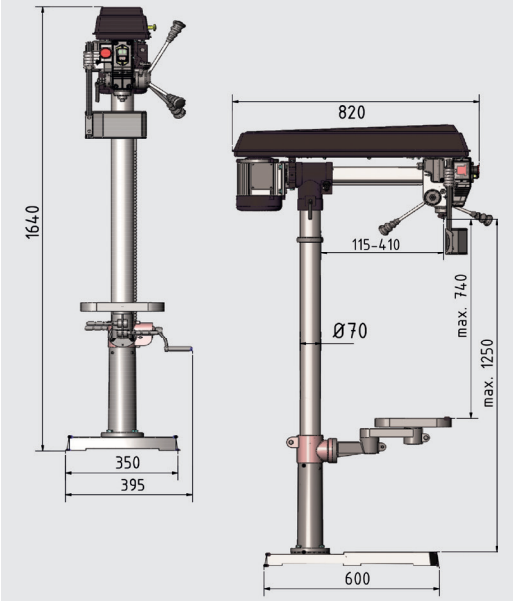

Accessories	Article no.
Quick release chuck direct MT 2 / 1 - 16 mm	3050571
Quick release chuck direct MT 2 / 1 - 13 mm	3050572
Morse taper MT 2/B16	3050659
Twist drill bit HSS / MT 2, 9 parts	3051002
Assortment of clamping tools size 12, 58-part size	3352017
Taper drill punch MSP1	3050636
Universal coolant unit 230 V	3351999
Coolant mist lubricator MMC 1 with magnetic holder	3356663
Coolant hose KMS 2	3356660
Twist drill bits HSS-CO 5%, 25 parts	3201010
Twist drill bits HSS-CO 5%, 51 parts	3201020
Twist drill bits HSS-CO 5%, 41 parts	3201021

For a large selection of machine vises see oon page 93
› More accessories for drills from page 86

Contents of package
› Key type drill chuck 1 - 16 mm B 16
› Morse taper MT 2/B16

TRADES

Precision radial drilling machine with standard chassis and clamping table

Suitable for machining bulky workpieces

Facts that impress in terms of quality, performance and price

- Versatile range of applications
- Powerful premium motor
- Electrically braked motor
- Long reach thanks to horizontally adjustable machine head
- Mechanical head, column and boom clamping
- Solid grey cast iron ensures stability, smooth action and precision
- Spindle with precision taper roller bearings
- Guaranteed concentricity of drill spindle better than 0.015 mm measured in the drilling spindle
- Large speed range from 155 - 2 250 rpm thanks to two-speed motor
- Sold, precision drilling table, generously dimensioned with precision surface finish and parallel T grooves
- Thick-walled steel column (Ø 115 mm) ensures smooth action and stability

DC control cabinet



› Complete and clear-cut

Pull-out safety switch



› Standards-compliant as per DIN 12717

Control elements



› 24-V DC electrical system



Figure shows optional chuck

GEAR

Technical specifications, accessories and dimensions

Model	RD 3
Article no.	3049030
Output	
Electrical connection	400 V / 3 Ph ~50 Hz
Motor output	0.55 / 1.1 kW
Drilling performance	
Drilling performance in steel (S235JR)	Ø 28 mm
Continuous drilling performance steel (S235JR)	Ø 24 mm
Thread tapping steel (S235JR)	M12
Spindle	
Spindle sleeve stroke	130 mm
Spindle holder	MT 3
Throat	160 - 530 mm
Rotational speeds	
Spindle speeds	155 - 2 250 rpm
Number of speeds	2 x 5 speeds
Drilling table	
Workspace length x width	780 x 520 mm
Usable workpiece mounting surface	500 x 550 mm
T-slot size/amount/distance	16 mm / 100 mm / 3
Drilling table load bearing capacity	200 kg
Clearance spindle - drilling table	170 - 630 mm
Clamping table	
Length x width x height	280 x 230 x 200 mm
T-slot size/amount/distance	16 mm / 98 mm / 2
Distance spindle to clamping table max.	430 mm
Dimensions and weight	
Column diameter	Ø 115 mm
Length x width x height	870 x 645 x 1 550 mm (chassis 2 150 mm)
Net weight	288 kg

Dimensions

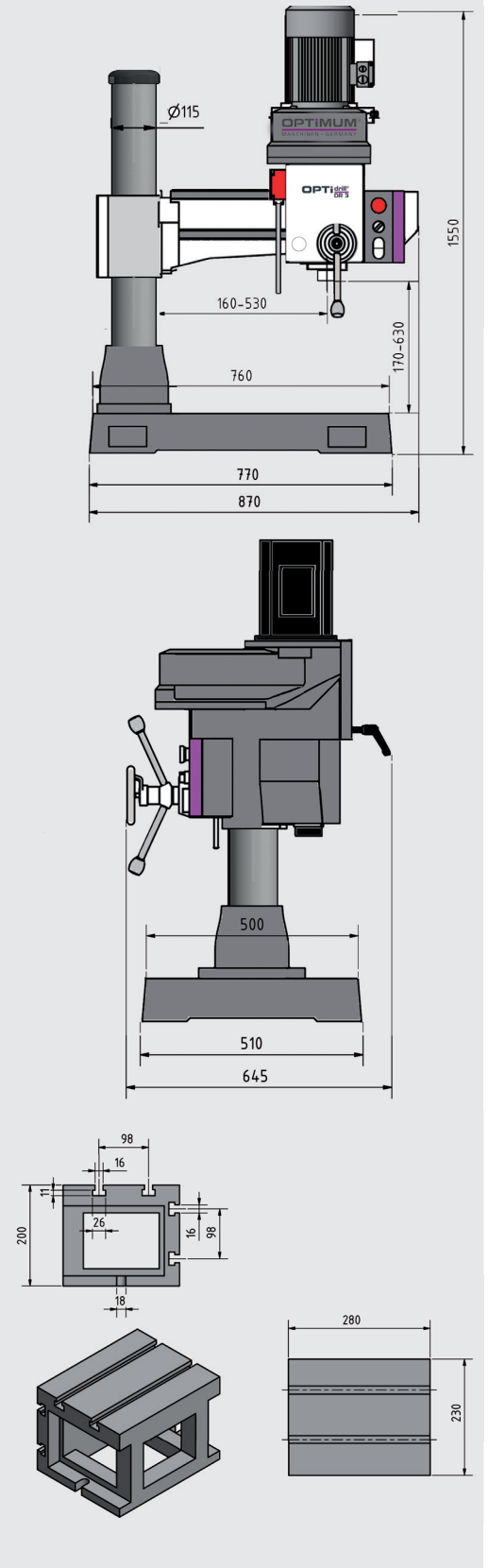

Accessories	Article no.
Quick release chuck direct MT 3/ 1 - 16 mm	3050573
Precision quick release chucks 8 mm; B16	3050608
Precision quick release chucks 10 mm; B16	3050610
NEW **Quick-action drill chuck DKC 13,** 0 - 13 mm	3050632
NEW **Quick-action drill chuck DKC 16**, 0 - 16 mm	3050633
Reduction sleeve MT 3 - MT 2	3050663
Morse taper MT 3/B16	3050660
Extension adapter MT 3 - MT 4	3050668
Twist drill bit HSS MT 3, 9-part	3051003
Twist drill bits HSS-CO 5%, 25 parts	3201010
Twist drill bits HSS-CO 5%, 51 parts	3201020
Twist drill bits HSS-CO 5%, 41 parts	3201021
Assortment of clamping tools size 14, 58 parts	3352018
Universal coolant unit	3351999
Thread tapping chuck MT 3, M3 - M12	3050705

For a large selection of machine vises see on page 93
› More accessories for drills from page 86

Contents of package
› Machine chassis
› Clamping table

Precision, solid radial drilling machines, premium quality

Ideal for versatile deployment in one-off and serial production

Facts that impress in terms of quality, performance and price

- Versatile range of applications, such as drilling, reaming, thread tapping
- Electrically braked motor
- Control elements with 24 V DC electronics
- Heavy, solid, premium quality casting
- Long reach thanks to horizontally adjustable machine head
- Clear-cut control panel layout
- Smooth action pivoting and travel axes
- Swivelling column with sophisticated workmanship and optimised clamping for maximum stability and minimum clamping offset
- Torsionally stiff boom design, capable of supporting heavy loads
- Height-adjustment of boom via powerful motorised drive and lifting spindle
- Drilling head gear box runs in oil sump
- Boom guideways tempered and precision ground
- Gear wheels made of chrome-nickel steel, tempered and precision ground for lower noise and smooth action
- Drilling head and column can be clamped or released separately
- Right-handed/left-handed rotation
- Solid, generously dimensioned precision drilling table
- Hardened and ground clamping table with parallel T-slots
- Machine lamp
- Overload protection
- Thick-walled cast column ensures very smooth action and stability
- LED lamp
- Coolant unit with coolant tank in machine base

RD 4 / RD 5

- All axes are clamped manually

RD 6

- Column is clamped hydraulically

DC control cabinet



› All contactors und relays by SIEMENS and Schneider
› Complete and clear-cut

Pull-out safety switch



› Standards-compliant as per DIN 12717

YouTube
Follow this for the video presentation of our OPTIMUM RD 5 radial drilling machine



Fig. RD 5 with optional accessories

Technical data and accessories

GEAR

Model	RD 4	RD 5	RD 6
Article no.	3049040	3049050	3049070
Output			
Electrical connection	400 V / 3 Ph ~50 Hz	400 V / 3 Ph ~50 Hz	400 V / 3 Ph ~50 Hz
Total rated value	3 kW	4 kW	6.5 kW
Spindle motor drive output	1.5 kW	2.25 kW	4 kW
Boom lift motor drive output	0.75 kW	0.75 kW	1.5 kW
Hydraulic clamping drive	-	-	0.75 kW
Coolant pump motor	90 W	90 W	90 W
Drilling performance			
Drilling performance in steel (S235JR)	Ø 32 mm	Ø 42 mm	Ø 50 mm
Continuous drilling performance steel (S235JR)	Ø 28 mm	Ø 40 mm	Ø 45 mm
Spindle			
Spindle sleeve stroke	220 mm	230 mm	270 mm
Spindle holder	MT 4	MT 4	MT 5
Automatic spindle sleeve feed	3 speeds: 0.05-0.15 mm/rev	3 speeds: 0.05-0.15 mm/rev	3 speeds: 0.06-0.2 mm/rev
Boom			
Angle of rotation	± 180°	± 180°	± 180°
Drilling head travel (horizontal)	530 mm	820 mm	1 250 mm
Boom lift stroke (vertical)	580 mm	570 mm	680 mm
Rotational speeds			
Spindle speeds	73 - 1 247 rpm	37 - 1 253 rpm	44 - 1 206 rpm
Number of speeds	6	12	12
Drilling table			
Large base L x W	1 260 x 700 mm	1 608 x 745 mm	2 550 x 970 mm
Base work area L x W x H	828 x 522 mm	1 147 x 589 mm	1 800 x 830 mm
T-slot size/amount/distance	19 mm / 171 mm / 3	19 mm / 171 mm / 3	14 mm / 180 mm / 4
Clearance spindle to base	260 - 1 060 mm	470 - 1 270 mm	465 - 1 420 mm
Distance spindle to column	220 - 750 mm	280 - 1 100 mm	350 - 1 600 mm
Clamping table			
Clamping table work area L x W	600 x 445 x 380 mm	635 x 520 x 415 mm	630 x 500 x 500 mm
T-slot size/amount/distance	19 mm / 100 mm / 3	19 mm / 121 mm / 3	22 mm / 150 mm / 3
Distance spindle to clamping table	0 - 675 mm	50 - 850 mm	0 - 910 mm
Dimensions and weight			
Column diameter	210 mm	260 mm	320 mm
Length x width x height max.	1 260 x 700 x 2 180 mm	1 725 x 745 x 2 550 mm	2 670 x 1 120 x 2 760 mm
Net weight	1 120 kg	1 800 kg	3 200 kg

Accessories	Article no.
Precision quick release chucks 1 - 8 mm; B16	3050608
Precision quick release chucks 1 - 10 mm; B16	3050610
NEW **Quick-action drill chuck DKC 13,** 0 - 13 mm	3050632
NEW **Quick-action drill chuck DKC 16**, 0 - 16 mm	3050633
› More accessories for drills from page 86	

Accessories RD 4 / RD 5	Article no.
Quick release chuck direct MT 4 / 1 - 16 mm	3050574
Reduction sleeve MT 4 - MT 3	3050664
Twist drill HSS MT 3	3051003
Morse taper MT 4/B16	3050661
Blank holder 18 mm/M16	3352032
Assortment of clamping tools size 16, 58 parts	3352019

Accessories RD 6	Article no.
Morse taper MT 5/B16	3050675
Assortment of clamping tools size 12, 58 parts	3352017

NEW

Clamping table	Article no.
for **RD 4** L x W x H 600 x 445 x 380 mm Net weight: 144 kg	3049204
for **RD 5** L x W x H 635 x 520 x 415 mm Net weight: 159 kg	3049205
for **RD 6** L x W x H 630 x 500 x 500 mm Net weight: 250 kg	3049206

NEW

Angled table	Article no.
Pivots through ± 90°	
Angled table S L x W x H 520 x 510 x 570 mm Net weight: 280 kg	3049210
Angled table L L x W x H 810 x 710 x 610 mm Net weight: 565 kg	3049212


OPTIMUM

MAGNETIC CORE DRILLING MACHINES



Magnetic drilling machines by OPTIMUM - when you need reliability, precision and cost-effective work results

Facts that impress in terms of quality, performance and price

- Stable drilling guidance thanks to long and especially deep mounted spindle sleeve holder
- The devices are earthed and double insulated, hence ideal for building sites
- Overload protection
- Internal self-lubrication function for a longer service life of the gear unit
- Soft-start is gentle on the motor and prolongs the service life
- High-quality mechanical design
- Conversion from core to full drilling in just a few actions
- Automatic return to starting position



YouTube
Follow this for the video presentation of our OPTIMUM magnetic drilling machines



Panel
› Ergonomic switch arrangement avoids confusion



Automatic internal lubrication
› The coolant is routed directly to the tip of the core bit
› No dry running and overheating of the drill bit
› No superfluous use of coolant
› Tool service lives and work results are substantially improved

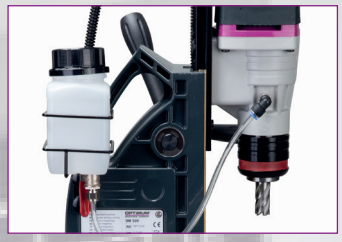

Coolant tank
› Detachable coolant tank
› External fastening
› Well-designed and practical

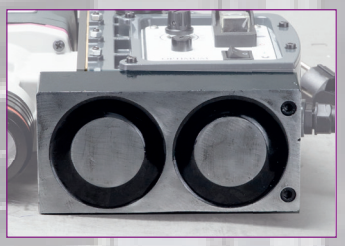

Magnetic base
› Monitoring of the magnetic force (if there is no enough metal or a failure of the magnets, the machine stops automatically)
› Magnetic based with wear-proof design to extend the service life of the magnetic base and thus the maximum magnetic holding force



Motor
› Powerful motor with high torque and low-maintenance



Transport case
› For convenient transport and optimum protection
› Ideal protection of the machines also in tough conditions.

Metal case
› for the DM 35PF and DM 50PM machines



Handles
› Ergonomic and rugged handles for "balanced" holding/fastening of the machine
› Rugged crank handle

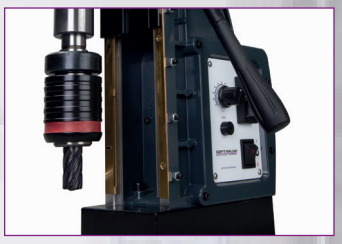

Guides
› Safe guides for stability and precision
› Vario machines with low-wear brass guides

Thread tapping chuck with 6 inserts	
MT 2 M3 - M12	3050702



For magnetic core drilling machines with quick-change chuck (DM35V/50V/60V/98V/36VT)

Chuck adapter	
	3876020



Weldon 19 mm to 1/2"' x 20 OT

For magnetic core drilling machines DM60V, DM98V and DM36VT

Chuck	
1.5 - 13 mm	3876002



Including chuck key

For magnetic core drilling machines with quick-change chuck (DM35V/50V/60V/98V/36VT)

Core bit set HSS-TiAlN 30	3072010

› Five HSS core bits and one TiAlN core bit
› For testing, including one 18 mm core bit featuring our highest quality level with TiAlN coating for a long service life and excellent cutting properties
› Set in a practical plastic case
› Five HSS core drill bits Ø 12, 14, 16, 20, 22 mm, one TiAlN core drill bit Ø 18 mm
› Drilling depth 30 mm, one ejector pin



Core bit set TiAlN 30	3072020

› Core bit with hard and smooth TiAlN coating
› TiAlN coating for a long service life and excellent cutting properties
› Set in a practical plastic case
› Six TiAlN core bits Ø 12, 14, 16, 18, 20, 22 mm
› Drilling depth 30 mm
› One ejector pin



TRADES

OPTI drill® DM 35

▶ Weldon shank

Control panel





Fig.: with optional accessories



Core drilling	
Drill bit Ø max.	Ø 35 mm
Bit depth max.	35 mm
Twist drilling	
Drill bit Ø max.	Ø 13 mm

OPTI drill® DM 50

▶ Weldon shank

Control panel





Fig.: with optional accessories



Core drilling	
Drill bit Ø max.	Ø 50 mm
Bit depth max.	50 mm
Twist drilling	
Drill bit Ø max.	Ø 13 mm

OPTI drill® DM 35PF with automatic spindle sleeve feed

▶ Weldon shank

Spindle sleeve feed



› Automatic
› Return side



Fig.: with optional accessories



Core drilling	
Drill bit Ø max.	Ø 35 mm
Bit depth max.	35 mm

Model	DM 35	DM 50	DM 35PF
Article no.	3071035	3071050	3071435
Output			
Electrical connection	230 V / 1 Ph ~50 Hz	230 V / 1 Ph ~50 Hz	230 V / 1 Ph ~50 Hz
Motor output	1.6 kW	1.75 kW	1.6 kW
Collets			
Spindle holder	Weldon 3/4“	Weldon 3/4“	Weldon 3/4“
Head stroke	210 mm	220 mm	210 mm
Magnetic foot			
Magnetic foot dimensions	166 x 80 mm	166 x 80 mm	166 x 80 mm
Magnetic attraction force	13.8 kN	14.5 kN	16 kN
Rotational speeds			
Speed without load	810 rpm	790 rpm	810 rpm
Dimensions and weight			
Length x width x height	370 x 180 x 580 mm	250 x 220 x 360 - 530 mm	350 x 250 x 430 mm
Net weight	10.5 kg	10.6 kg	14 kg

TRADES

OPTIdrill® DM 35V

- Infinitely adjustable speed
- Quick-action chuck
- Weldon shank
- Low-wear brass guide



Fig.: with optional accessories



Core drilling	
Drill bit Ø max.	Ø 35 mm
Bit depth max.	35 mm
Twist drilling	
Drill bit Ø max.	Ø 13 mm

OPTIdrill® DM 50V

- Infinitely adjustable speed
- Quick-action chuck
- Weldon shank
- Low-wear brass guide

Bubble spirit level



› for perfect alignment



Fig.: with optional accessories



Core drilling	
Drill bit Ø max.	Ø 50 mm
Bit depth max.	50 mm
Twist drilling	
Drill bit Ø max.	Ø 13 mm

Model	DM 35V	DM 50V
Article no.	3071135	3071150
Output		
Electrical connection	230 V / 1 Ph ~50 Hz	230 V / 1 Ph ~50 Hz
Motor output	1.55 kW	1.7 kW
Collets		
Spindle holder	Weldon 3/4“	Weldon 3/4“
Head stroke	120 mm	130 mm
Magnetic foot		
Magnetic foot dimensions	166 x 80 mm	166 x 80 mm
Magnetic attraction force	14.8 kN	15.6 kN
Rotational speeds		
Speed without load	120 - 830 rpm continuous	100 - 810 rpm continuous
Dimensions and weight		
Length x width x height	250 x 220 x 470 mm	250 x 220 x 470 mm
Net weight	10.8 kg	11 kg

The (speed controlled) magnetic drilling machines comply with the DIN EN 55011 standard, class C2.

OPTI drill® DM 60V

- Infinitely adjustable speed
- Quick-action chuck
- Weldon and MT shank
- Low-wear brass guide



Fig.: with optional accessories



Core drilling	
Drill bit Ø max.	Ø 60 mm
Bit depth max.	50 mm
Twist drilling	
Drill bit Ø max.	Ø 23 mm

OPTI drill® DM 98V

TRADES

- Infinitely adjustable speed
- Quick-action chuck
- Weldon and MT shank
- Low-wear brass guide

Bubble spirit level



› for perfect alignment



Fig.: with optional accessories



Core drilling	
Drill bit Ø max.	Ø 98 mm
Bit depth max.	75 mm
Twist drilling	
Drill bit Ø max.	Ø 28 mm

Model	DM 60V	DM 98V
Article no.	3071160	3071198
Output		
Electrical connection	230 V / 1 Ph ~50 Hz	230 V / 1 Ph ~50 Hz
Motor output	1.89 kW	2.18 kW
Collets		
Spindle holder	MT 2	MT 3
Head stroke	220 mm	230 mm
Magnetic foot		
Magnetic foot dimensions	202 x 103 mm	202 x 103 mm
Magnetic attraction force	16 kN	17 kN
Rotational speeds		
Speed without load	100 - 490 rpm continuous	160 - 370 rpm continuous
Dimensions and weight		
Length x width x height	330 x 240 x 650 mm	330 x 240 x 650 mm
Net weight	18.3 kg	18.5 kg

The (speed controlled) magnetic drilling machines comply with the DIN EN 55011 standard, class C2.

TRADES

OPTIdrill® DM 36VT

With thread tapping function

- Thread tapping device.
- Infinitely adjustable speed
- Quick-action chuck
- MT Weldon and MT shank



Fig.: with optional accessories

Multifunctional



› Thread tapping



› Twist drilling



› Core drilling

Model	DM 36VT
Article no.	3071236
Output	
Electrical connection	230 V / 1 Ph ~50 Hz
Motor output	1.55 kW
Collets	
Spindle holder	MT 2
Head stroke	220 mm
Magnetic foot	
Magnetic foot dimensions	166 x 80 mm
Magnetic attraction force	14.2 kN
Rotational speeds	
Speed without load	15 - 270 / 520 rpm 2 speeds, continuously variable
Dimensions and weight	
Length x width x height	250 x 220 x 530 mm
Net weight	12 kg



Core drilling	
Drill bit Ø max.	Ø 36 mm
Bit depth max.	35 mm
Twist drilling	
Drill bit Ø max.	Ø 18 mm
Thread tapping	M15

OPTI drill® DM 38VF
for cramped conditions

- Infinitely adjustable speed
- Weldon shank

Bubble spirit level



› for perfect alignment

Pluggable handle



› can be fitted on the left or right side of the machine as required



Fig.: with optional accessories



Core drilling	
Drill bit Ø max.	Ø 38 mm
Bit depth max.	35 mm

OPTI drill® DM 50PM
With permanent magnet

- Infinitely adjustable speed
- MT collet



Fig.: with optional accessories

Two magnets



› Can be individually switched
› The machine can be moved to check or clean the hole without losing its position on the pipe

Permanent magnet



› Power-independent permanent magnet 100% safe



Core drilling	
Drill bit Ø max.	Ø 50 mm
Bit depth max.	50 mm
Twist drilling	
Drill bit Ø max.	Ø 13 mm

Model	DM 38VF	DM 50PM
Article no.	3071338	3071550
Output		
Electrical connection	230 V / 1 Ph ~50 Hz	230 V / 1 Ph ~50 Hz
Motor output	1.65 kW	1.7 kW
Collets		
Spindle holder	Weldon 3/4“	Weldon 3/4“
Head stroke	45 mm	230 mm
Magnetic foot		
Magnetic foot dimensions	166 x 80 mm	2 units 186 x 40 mm
Magnetic attraction force	14.5 kN	6.5 kN
Rotational speeds		
Speed without load	640 rpm	20 - 280 / 510 rpm 2 speeds, continuously variable
Dimensions and weight		
Length x width x height	350 x 150 x 240 mm	340 x 250 x 430 mm
Net weight	8.8 kg	11.7 kg

The magnetic drilling machines comply with DIN EN 55011:2011-04 class C2.

ACCESSORIES FOR DRILLS





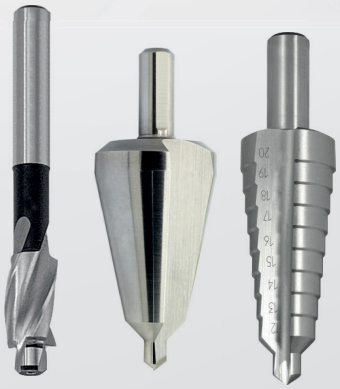



Compatibility overview accessories for drills

Accessories drilling			V-belt drilling machines																											Drills with gear units												Radial					
			DQ 14	DQ 18	DQ 22	DQ 20V	DQ 25	DQ 32	D 17Pro/ B 17Pro basic	D 23Pro	D 26Pro	D 33Pro	DP 26T/DP 26F	DP 33	DX 13V	DX 15V	DX 17V/ DX 17E	B 16 H	B 24H / B 24HV	B 28H / B 28HV	B 34H / B 34HV	DH 18V	DH 24FT	DH 28FT / DH 28FS	DH 24BV	DH 28BV	DH 40BV	DH 40G / DH 40GP	DH 40CT / DH 40CTP	DH 26GT	DH 28GS / DH 28GSV	DH 32GS / DH 32GSV	B 40GSP / GSM	DH 35G / DH 35V	DH 45G / DH 45V	B 50GSM	DH 55G / DH 55V	RB 6T	RB 8S	RD 3	RD 4 / RD 5	RD 6
			B16	MT2	MT2	MT2	MT3	MT4	MT2	MT2	MT3	MT4	MT3	MT4	B 16	MT2	MT2	MT2	MT2	MT3	MT4	MT2	MT2	MT3	MT2	MT3	MT4	MT4	MT4	MT3	MT3	MT4	MT4	MT4	MT4	MT4	MT4	MT4	MT2	MT2	MT3	MT4	MT5
Clamping plate		5190015						○				●	○	○							○						●	●	●	●	●	●	●	●	●	●			●	●	●
Collet chuck	MT2/ ER 25	3352052		●	●	●			●	●						●	●	●	●			●	●		●													●	●			
	MT2 /ER 32	3352053		●	●	●			●	●						●	●	●	●			●	●		●													●	●			
	MT3/ ER 32	3352093					●				●		●							●				●		●					●	●								●		
	MT4/ ER 32	3352094						●				●		●							●						●	●	●			●	●	●	●	●	●				●	
Thread tapping chuck B 16 *(only in combination with adapter B16 / MT..)*		3352042	●	●	●	●	●	●	●	●	●	●	●	●	●	●	●	●	●	●	●	●	●	●	●	●	●	●	●	●	●	●	●	●	●	●	●	●	●	●	●	●
Thread tapping chuck	MT2 -M3-12	3050702			● 400V					● 400V						●	●	●	●			●	●		●													●	●			
	MT3 -M3-12	3050705					●						● 400V							●				●		●					●	●								●		
	MT4 -M3-12	3050709						●				●		●							●						●	●				●	●	●	●	●	●				●	
	MT3 -M8-20	3050706					●				●		● 400V							●				●		●					●	●								●		
	MT4 -M8-20	3050710						●				●		●							●						●	●				●	●	●	●	●	●				●	
Quick change adapter with B16 collet	small	3050715		●	●	●	●	●	●	●	●	●	●	●		●	●	●	●	●	●	●	●	●	●	●	●	●	●	●	●	●	●	●	●	●	●	●	●	●	●	●
	large	3050716		●	●	●	●	●	●	●	●	●	●	●		●	●	●	●	●	●	●	●	●	●	●	●	●	●	●	●	●	●	●	●	●	●	●	●	●	●	●
Thermdrill collet chuck	B16 - ER32	3060007	●												●																												
Quick release chuck *(For MT spindle holder only in combination with matching adapter.)*	1 - 8 mm	3050608	●	●	●	●	●	●	●	●	●	●	●	●	●	●	●	●	●	●	●	●	●	●	●	●	●	●	●	●	●	●	●	●	●	●	●	●	●	●	●	●
	1 - 10 mm	3050610	●	●	●	●	●	●	●	●	●	●	●	●	●	●	●	●	●	●	●	●	●	●	●	●	●	●	●	●	●	●	●	●	●	●	●	●	●	●	●	●
	DKC13	3050632	●	●	●	●	●	●	●	●	●	●	●	●	●	●	●	●	●	●	●	●	●	●	●	●	●	●	●	●	●	●	●	●	●	●	●	●	●	●	●	●
	DKC16	3050633	●	●	●	●	●	●	●	●	●	●	●	●	●	●	●	●	●	●	●	●	●	●	●	●	●	●	●	●	●	●	●	●	●	●	●	●	●	●	●	●
Direct quick release chuck	MT2	3050571		●	●	●			●	●						●	●	●	●			●	●		●													●	●			
	MT2	3050572		●	●	●			●	●						●	●	●	●			●	●		●													●	●			
	MT3	3050573					●				●									●				●		●					●	●								●		
	MT 4	3050574						●				●									●						●	●	●			●	●	●	●	●	●				●	
Assortment of clamping tools	SPW 8	3352015														●	●																										
	SPW 10	3352016							●	●								●				●	●																				
	SPW 12	3352017	●	●	●	●	●	●			●	●			●	●	●		●	●	●			●	●	●	●	●	●	●	●	●		●				●	●			
	SPW 14	3352018																																	●						●	●	
	SPW 16	3352019																																	●	●	●						
T-slot nut (individual)	M 8x10	3353020													●	●																											
	M 10x12	3353022							●	●								●				●	●																				
	M 12x14	3353025	●	●	●	●	●	●			●	●			●	●	●		●	●	●			●	●	●	●				●	●	●		●							
	M 12x16	3353024	●	●	●	●	●	●			●	●			●	●	●		●	●	●			●	●	●	●				●	●	●		●							
	M 14x16	3353026														●																				●					●		
	M 16x18	3353028																																		●	●	●				●	
Twist drill HSS	MT2	3051002		●	●	●			●	●						●	●	●	●			●	●		●													●	●			
	in combination with matching reduction sleeve MTx/MT2						●	●			●	●	●	●						●	●			●		●	●	●	●	●	●	●	●	●	●	●	●			●	●	●
	MT3	3051003					●				●		●							●				●		●					●	●								●		
	in combination with matching reduction sleeve MTx/MT3							●				●		●							●						●	●	●			●	●	●	●	●	●				●	●
Step drill bit set	25-part	3201010	●	●	●	●	●	●	●	●	●	●	●	●	●	●	●	●	●	●	●	●	●	●	●	●	●	●	●	●	●	●	●	●	●	●	●	●	●	●	●	●
	51-part	3201020	●	●	●	●	●	●	●	●	●	●	●	●	●	●	●	●	●	●	●	●	●	●	●	●	●	●	●	●	●	●	●	●	●	●	●	●	●	●	●	●
	41-part	3201021	●	●	●	●	●	●	●	●	●	●	●	●	●	●	●	●	●	●	●	●	●	●	●	●	●	●	●	●	●	●	●	●	●	●	●	●	●	●	●	●
Conical counterbore set		3201050	●	●	●	●	●	●	●	●	●	●	●	●	●	●	●	●	●	●	●	●	●	●	●	●	●	●	●	●	●	●	●	●	●	●	●	●	●	●	●	●

Accessories drilling			V-belt drilling machines																									Drills with gear units										Radial				
			DQ 14	DQ 18	DQ 22	DQ 20V	DQ 25	DQ 32	D 17Pro/ B 17Pro basic	D 23Pro	D 26Pro	D 33Pro	DP 26T/DP 26F	DP 33	DX 13V	DX 15V	DX 17V/ DX 17E	B 16 H	B 24H / B 24HV	B 28H / B 28HV	B 34H / B 34HV	DH 18V	DH 24FT	DH 28FT / DH 28FS	DH 24BV	DH 28BV	DH 40BV	DH 40G / DH 40GP	DH 40CT / DH 40CTP	DH 26GT	DH 28GS / DH 28GSV	DH 32GS / DH 32GSV	B 40GSP / GSM	DH 35G / DH 35V	DH 45G / DH 45V	B 50GSM	DH 55G / DH 55V	RB 6T	RB 8S	RD 3	RD 4 / RD 5	RD 6
			B16	MT2	MT2	MT2	MT3	MT4	MT2	MT2	MT3	MT4	MT3	MT4	B 16	MT2	MT2	MT2	MT2	MT3	MT4	MT2	MT2	MT3	MT2	MT3	MT4	MT4	MT4	MT3	MT3	MT4	MT4	MT4	MT4	MT4	MT4	MT2	MT2	MT3	MT4	MT5
Spot facer set		3201051	●	●	●	●	●	●	●	●	●	●	●	●	●	●	●	●	●	●	●	●	●	●	●	●	●	●	●	●	●	●	●	●	●	●	●	●	●	●	●	●
Step drill bit set		3201055	●	●	●	●	●	●	●	●	●	●	●	●	●	●	●	●	●	●	●	●	●	●	●	●	●	●	●	●	●	●	●	●	●	●	●	●	●	●	●	●
Step drill bit set		3201056	●	●	●	●	●	●	●	●	●	●	●	●	●	●	●	●	●	●	●	●	●	●	●	●	●	●	●	●	●	●	●	●	●	●	●	●	●	●	●	●
Thread repair assortment		3202010	●	●	●	●	●	●	●	●	●	●	●	●	●	●	●	●	●	●	●	●	●	●	●	●	●	●	●	●	●	●	●	●	●	●	●	●	●	●	●	●
Reduction sleeve	MT3-MT2	3050663					●				●									●				●		●				●	●									●			
	MT4-MT3	3050664						●				●									●						●	●	●		●		●	●	●	●				●		
	MT4-MT2	3050665						●				●									●						●	●	●		●		●	●	●	●				●		
Morse cone	MT2, B16	3050659		●	●	●			●	●						●	●	●	●			●	●		●													●	●			
	MT3, B16	3050660					●				●									●				●		●				●	●									●			
	MT4, B16	3050661						●				●									●						●	●	●			●	●	●	●	●	●				●		
	MT5, B16	3050675																																									●
Extension adapter	MT2 - MT3	3050667														●		●				●	●		●													●	●			
	MT3 - MT4	3050668					●				●		●							●				●		●				●	●									●			
Taper drill punch	MSP 1	3050636					●		●	●	●					●			●				●	●	●	●				●	●							●	●	●		
	MSP 2	3050637						●				●									●						●		●												●	●
Blank holder	14 mm	3352031	●	●	●	●	●			●	●			●	●	●	●		●	●	●		●	●	●	●	●	●	●	●	●	●		●				●	●			●
	18 mm	3352032																															●		●	●	●				●	
Morse taper for drill chuck	MT4/M16 B16	3350304																												●												
Thermdrill	MT2	3060007														●	●		●	●	●	●	●		●						●	●		●	●	●	●					
Coolant pump		3351999		●	●	●	●	●	●	●	●	●	●	●				●	●	nur H Modell	nur H Modell	●	●	●	●	●	●	●	●	●	●											
Machine base MSM 1		3353000													●	●	●					●	●																				
Chip		3352999													●	●	●					●	●																				
Universal machine and tool trolley MSU 3		3352990	●	●	●	●			●	●			● nur T-Modell		●	●	●	●	●			●	●	● nur FT-Modell	●													●				
Universal machine and tool trolley MSU 4		3352991	●	●	●	●			●	●			● nur T-Modell		●	●	●	●	●			●	●	● nur FT-Model	●													●				
Workplace mats			●	●	●	●	●	●	●	●	●	●	●	●	●	●	●	●	●	●	●	●	●	●	●	●	●	●	●	●	●	●	●	●	●	●	●	●	●	●	●	●

Machine vices

BME 85		3052630	●						○																																		
BME 100		3052632	●	●	●	●	●		●																															●	●			
BME 120		3052634			●	●	●	●	○																															●	●			
BME 150		3052636						●																																				
BMP 100		3052610	●	●	●	●	●		●	●	●				●	●	●	●	●			●	●		●															●	●			
BMP 130		3052613			●	●	○	●		○	●	●	●	○	●	●	●	●	●	●	●	●	●	●	●	●	●		●*											●	●			
BMP 160		3052616						●			○	●	●	●						●	●			●		●	●	●	●*	○	○	○	○	○	○	○	○					
BMP 200		3052620										●		●						○	●			○		○	●	●		○	○	○	○	○	○	○	○					
BSI 100		3000210						●			●	●		●	●	●	●	●	●	●	●	●	●	●	●	●	●		●*	●	●	●		●						●		
BSI 140		3000214										●		●					○	○	●		○	○	○	○	●	●	●*	●	●	●	●	●	●	●	●				●	●	●
BSI 200		3000220												○							○						●						●		●	●	●				●	●
BSI-Q 100		3000230						●			●	●		●	●	●	●	●	●	●	●	●	●	●	●	●	●		●*	●	●	●		●						●		
BSI-Q 140		3000234										●		●					○	○	●		○	○	○	○	●	●	●*	●	●	●	●	●	●	●	●				●	●	●
BSI-Q 200		3000240												○							○						●						●		●	●	●				●	●

● Recommended	○ Recommended - restrictions apply	● *only for drilling work! For milling work see milling machine vices!

This equipment table covers all recommended equipment options. Depending on the individual case, use of accessories can be meaningful beyond this.

Clamping plate with 720 mm stop rail, ideal for any drilling table

MADE IN GERMANY

› Quickly and easily fitted on the machine tables of drilling or milling machines
› Clamping elements and stop modules can be freely positioned and clamped without tools
› The optional table extension is attached to the side mounting rails and extends the clamping plate to the left, right or front



Accessories	Clamping plate
Article no.	5190015
Dimensions (L x W x H)	450 x 400 x 50 mm
Net weight	8.9 kg

Contents of package
› Clamping plate
› Mounting support
› Stop rail 720 mm
› Two clamping elements

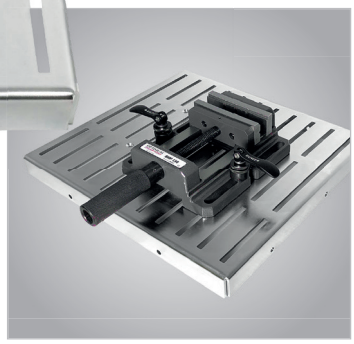

Machine vice
clamped

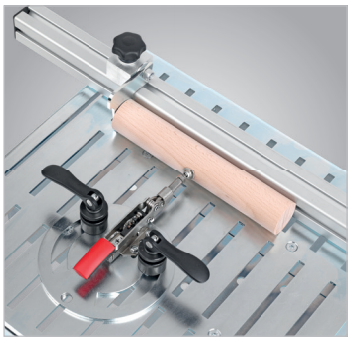

Adapter platen
with clamp, horizontal



Stop rail

Accessories

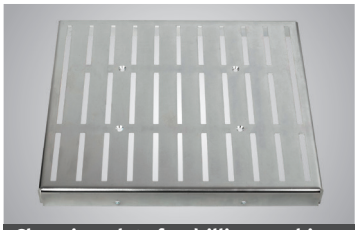

Clamping plate for drilling machines
incl. assembly carrier 450 x 400 mm
Art no. 5198110



Stop rail 720 mm
incl. 2 clamping elements
Art no. 5198121



Machine vice
BMP 100 Art no. 3052610
BMP 130 Art no. 3052613



Machine vice
BMP 160 Art no. 3052616
BMP 200 Art no. 3052620



Adapter platen round with horizontal clamp length 180 mm
Art no. 5198161



Adapter platen round with upright clamp length 180 mm
Art no. 5198163



Stop and clamping element Ø30 mm
Clamping range 14 - 26 mm
Art no. 5198149



Stop and clamping element Ø30 mm
Clamping range 2 - 14 mm
Art no. 5198150



Connecting web
Art no. 5850126



Table extension
1 100 x 172 mm
Art no. 5850112



Position bracket
incl. 1 clamping element
Art no. 5198151

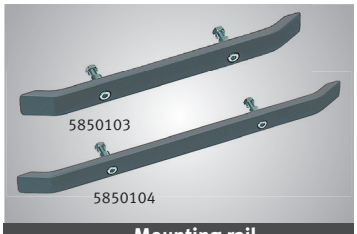

Mounting rail
L: 430 mm front Art no. 5850104
L: 330 mm left + right Art no. 5850103

Accessories	Article no.
Collet chuck set	
MT 2/ ER 25 - M10	3352052
› Collet chuck	
› 15 spring collets; sizes Ø 1.5 - Ø 16 mm/DIN ISO 15488	
› Hook spanner, aluminium case	
MT 2/ ER 32 - M10	3352053
› Collet chuck	
› 18 spring collets; sizes Ø 2 - Ø 20 mm/DIN ISO 15488	
› Hook spanner, aluminium case	
MT 3/ ER 32 - M12	3352093
› Collet chuck	
› 18 spring collets; sizes Ø 2 - Ø 20 mm/DIN ISO 15488	
› Hook spanner, aluminium case	
MT 4/ ER 32 - M16	3352094
› Collet chuck	
› 18 spring collets; sizes Ø 2 - Ø 20 mm/DIN ISO 15488	
› Hook spanner, aluminium case	



OPTIMUM Precision quick release chuck	
Concentricity better than 0.06 mm	
1 - 8 mm; B16	3050608
1 - 10 mm; B16	3050610



OPTIMUM Direct quick release chuck	
MT 2 1 - 16 mm; up to 6 000 rpm	3050571
MT 2 1 - 13 mm; up to 8 000 rpm	3050572
MT 3 1 - 16 mm; up to 6 000 rpm	3050573
MT 4 1 - 16 mm; up to 6 000 rpm	3050574

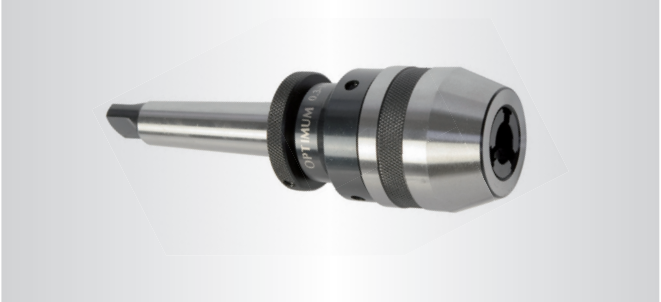

Accessories	Article no.
Thread tapping chuck with quick-change inserts	
Note: The square size depends on the shank diameter of the manual thread tapping bit (DIN standard)	
MT 2; sizes M3 - M12	3050702
MT 3; sizes M3 - M12	3050705
MT 4; sizes M3 - M12	3050709
› M3 - M12	
MT 3; sizes M8 - M20	3050706
MT 4; sizes M8 - M20	3050710
› M8 - M20	



Thermdrill collet chuck	3060007
› B16 - ER32	

NEW

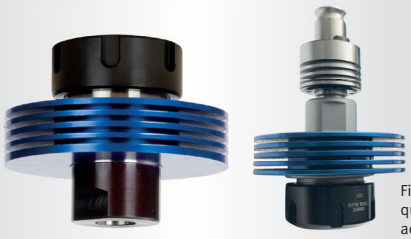

Fig.: with optional quick change adapter

Quick change adapter with B16 collet	
Thread tapping chuck small (M3 - M12)	3050715
Thread tapping chuck large (M8 - M20)	3050716



Quick release chuck	
DKC13 / 0-13 mm 4 800 rpm	3050632
DKC16 / 0-16 mm 4 000 rpm	3050633

NEW



Accessories	Article no.
Assortment of clamping tools size	
› Metric thread	
› 58-part: 24 pull studs, 6 T-slot nuts , 6 nuts, 4 extension nuts , 6 step blocks, 12 clamping blocks	
Size 8	3352015
› T-slot nuts 10 mm; locking thread M 8	
Size 10	3352016
› T-slot nuts 12 mm; locking thread M10	
Size 12	3352017
› T-slot nuts 14 mm; locking thread M12	
Size 14	3352018
› T-slot nuts 16 mm; locking thread M 14	
Size 16	3352019
› T-slot nuts 18 mm; locking thread M16	

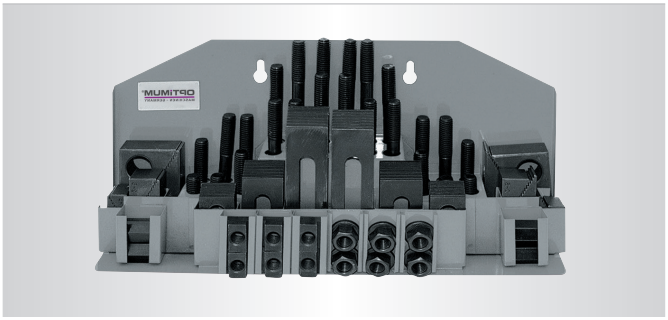

T-slot nut (individual)

Type	a	E	h	K	
M8 x 10	9.7	15	12	6	3353020
M10 x 12	11.7	18	14	7	3353022
M12 x 14	13.7	22	16	8	3353025
M12 x 16	15.7	25	18	9	3353024
M14 x 16	15.7	25	18	9	3353026
M16 x 18	17.7	28	20	10	3353028



Twist drill HSS with morse taper	
› 9-part; 14.5/16/18/20/22/24/26/28/30 mm	
› Long service life.	
› Good chip removal	
› Right handed	
MT 2	3051002
MT 3	3051003



Accessories	Article no.
Twist drill set	
› As per DIN 338 HSS-CO 5 %	
› Tetrahedral 135° split point allows for excellent self-centring	
› Improved tool service life thanks to alloyed components	
› High speed/feed properties	
› Strong core design optimises the structural strength of the bit and minimises the risk of bit breakage	
› Practical OPTIMUM plastic case	
25-part	3201010
› 1- 13 mm	
51-part	3201020
› 1 - 6 mm (in 0.1 mm increments)	
41-part	3201021
› 6 - 10 mm (in 0.1 mm increments)	

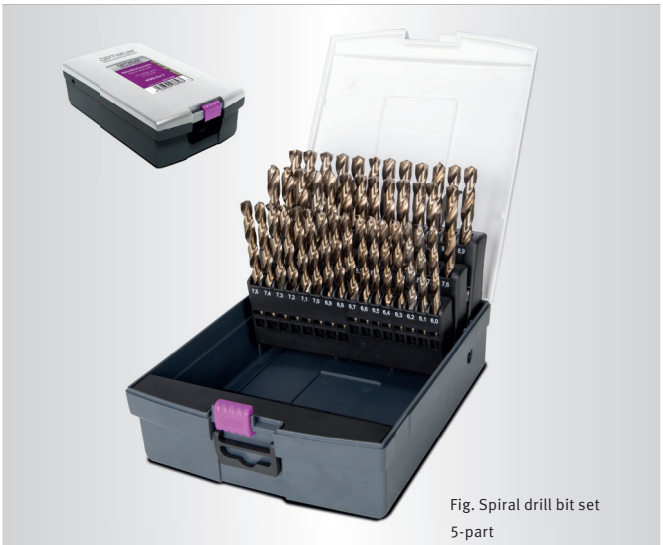

Fig. Spiral drill bit set 5-part

Conical counterbore set	3201050
› As per standard DIN 335C	
› HSS	
› 6-part: 6/8/10/11.5/15/19 mm	
› Premium conical counterbores Burrs are nicely chamfered and removed without causing scratches	
› Compatible with popular battery-powered screwdrivers and drills, including upright drilling machines	
› Practical OPTIMUM plastic case	



Accessories	Article no.
Spot facer set	3201051

› As per standard 373
› 6-part: for M3 / M4 / M5 / M6 / M8 / M10 mm screws
› HSS
› Piloted counterbore size 6.5 x 3.2 mm / 8 x 4.3 mm / 10 x 5.3 mm / 11 x 6.4 mm / 15 x 8.54 mm / 18 x 10.5 mm
› Fine grade for countersinking screws and nuts as per DIN 74
› Practical OPTIMUM plastic case



Step drill bit set	3201055

› 3-part: 3 - 14 mm / 8 - 20 mm / 16 - 30.5 mm
› HSS
› With sharp tip, no pre-drilling required
› Conically rising blades and radially undercut circumference for peeling action
› Drilling without burr and chatter marks
› Uses: Steel sheet 0.1 - 2 mm, stainless steel (V2A) 0.1 - 1 mm, non-ferrous metals 0.1 - 5 mm, plastics - 10 mm
› Practical OPTIMUM plastic case



Step drill bit set	3201056

› 3-part: 4 - 12 mm / 12 - 20 mm / 20 - 30 mm
› HSS
› Drilling and deburring cylindrical holes in materials up to 4 or 6 mm thickness.
› Shank with three clamping surfaces
› Drill step increment 1 mm
› Practical OPTIMUM plastic case



Accessories	Article no.
Thread repair assortment	3202010

› 5 units twist drill bit (5.2 mm/6.3 mm/8.3 mm/10.4 mm/12.4 mm)
› 5 units thread tap: (M5 / M6 / M8 / M10 / M12)
› 5 units inserter for threaded inserts
› 5 units tang breaker
› 100 units threaded inserts: 25 units each M5x0.8 mm / M6x1.0 mm/ M8x1.25 mm/ M10x1.5 mm
› 10 units threaded insert: M12x1.75 mm
› For repairing defective threads
› For reinforcing the thread on materials with a low shear strength
› Practical OPTIMUM metal case



Drilling and thread tapping set	3202015

› Through bore
› HSS
› 15-part
› 7 units thread tap: M3 / M4 / M5 / M6 / M8 / M10 / M12
› 7 units spiral bit DIN 338; Ø2.5 mm / Ø3.3 mm / Ø4.2 mm / Ø5.0 mm / Ø6.8 mm / Ø8.5 mm / Ø10.2 mm
› Tap wrench DIN 1814 size 1½
› Practical OPTIMUM plastic case



Accessories for drills

Accessories	Article no.
Reduction sleeve	
MT 3 - MT 2	3050663
MT 4 - MT 3	3050664
MT 4 - MT 2	3050665



Morse taper with adapter B16	
MT 2	3050659
MT 3	3050660
MT 4	3050661
MT 5	3050675
MT 6	3050676

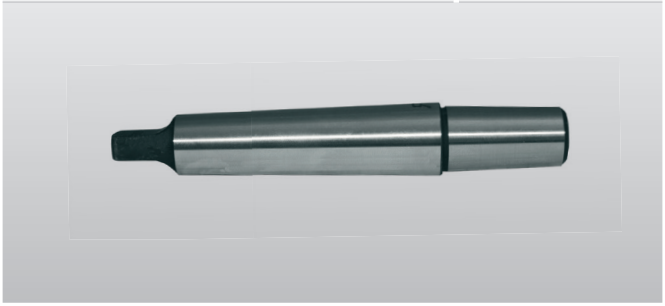

Extension adapter	
MT 2 - MT 3	3050667
MT 3 - MT 4	3050668

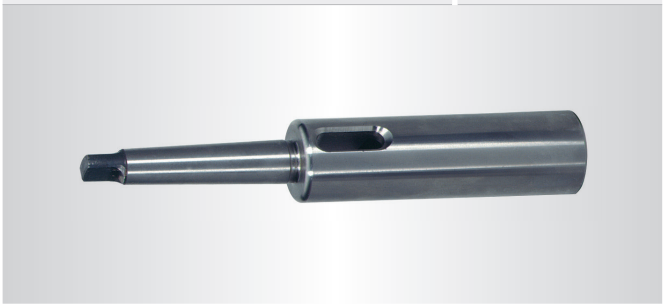

Taper drill punch	
MSP 1 for MT 1 to MT 3	3050636
MSP 2 for MT 4 to MT 6	3050637



Accessories	Article no.
Thread tapping chuck M5 - M12	3352042

› Quick reverse built-in, immediately effective on changing the feed direction
› Slip clutch 4-stage adjustable
› With collet B16

Scope of delivery:

› 2 units flexible spring collet
› 2 units flat spanner
› *Allen key



Hold-down unit set of 2	
› Clamping height adjustable	
› Brass plate below clamping arm protects material against damage	
Table groove **14 mm/M12**	3352031
› L x W x H: 115 x 42 x 39 mm	
› Height adjustment: 0 - 89 mm	
Table groove **18 mm/M 16**	3352032
› L x W x H: 133 x 50 x 49 mm	
› Height adjustment: 0 - 101 mm	



AQUACUT C1	3530030
› 10 litre cannister	
› For mixing emulsions	
› Drilling and cooling emulsion	
› High-pressure resistant and containing mineral oil, for long tool life and clean surfaces	
› Emulsifiable with water, microbe-resistant and kind to the skin	



You will find more coolant accessories from page 321

	Designation	Size	Article no.
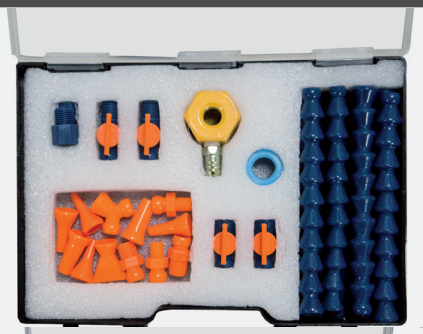	**Coolant hoses basic equipment** **1/4" - No. 1** › 8 units articulated hose 150 mm › 2 units each round nozzle 1/16" / 1/8" / 1/4", › 2 units NPT coupling 1/4" and 1/8", › 1 unit flat nozzle, › 1 unit Y-distributor, › 2 units shut-off valve inside and outside, › 2 units shut-off valve inside - 1/4", › 2 units NPT extension, › 1 unit magnetic base, 1 unit flexible sealing tape	1/4"	3356704
	**Coolant hoses basic equipment** **1/4" - No. 2** › 6 units articulated hose 150 mm › 2 units each round nozzle 1/16" / 1/8" / 1/4", › 2 units each NPT coupling 1/4" and 1/8", › 5 units flat nozzle, › 4 units 90° nozzle, › 1 unit Y-distributor, › 1 unit shut-off valve, inside and outside, › 1 unit shut-off valve, inside - 1/4" › 1 unit grips	1/4"	3356705
	**Coolant hoses basic equipment** **1/2" - No. 1** › 6 units articulated hose 150 mm › 2 units each round nozzle 1/2" / 3/8" / 1/4", › 2 units each NPT coupling 1/4" and 1/2", › 1 unit flat nozzle, › 3 units 90° round nozzle 1/2" / 3/8" / 1/4", › 1 unit Y-distributor, › 1 unit shut-off valve, inside and outside, › 1 unit shut-off valve, inside - 1/2" › 1 unit grips	1/2"	3356800

Universal coolant unit 3351999

› Connection 100W 230 V ~50 Hz
› Delivery height max. 2.5 m
› Delivery volume 3.5 litres per minute
› Tank capacity 11 litres
› Size L x W x H: 375 x 250 x 260
› Complete with tank, flexible tube, hose and switch/plug combination
› Magnetic base fastener for coolant hose



Coolant mist lubricator MMC1 3356663

› Magnetic base with a holding force of 75 kg
› Base size L x W x H: 62 x 50 x 55 mm
› Screw connection for external compressed air supply
› Flexible and stable hose with a length of 500 mm



Coolant hose KMS 2 3356660

› Insensitive to most solvents and chemicals
› Not electrically conductive
› Magnetic base holding force up to 50 kg
› Length of coolant hoses each 335 mm
› Hose connection 6 mm
› Coolant hoses ¼“



Cross tables KT

Facts that impress in terms of quality, performance and price

- Coolant channel
- Dovetail guide adjustable
- Handwheels right, front and left - for model KT 120 only right and front
- Adjustable handwheel scaling with 0.05 mm scale



Technical data	KT 120	KT 179	KT 180	KT 210
A (Base width)	222 mm	274 mm	274 mm	280 mm
D (base length)	280 mm	340 mm	340 mm	362 mm
C (table length)	400 mm	500 mm	700 mm	730 mm
E (table width)	120 mm	180 mm	180 mm	210 mm
G (T-slot size)	10 mm	12 mm	12 mm	14 mm
Length x width x height	506 x 400 x 140 mm	748 x 483 x 155 mm	948 x 483 x 155 mm	1 060 x 538 x 185 mm
Net weight	22 kg	40 kg	52 kg	84 kg
Strokes				
X axis	220 mm	287 mm	480 mm	480 mm
Y axis	165 mm	167 mm	170 mm	210 mm
Max. load	40 kg	55 kg	55 kg	80 kg

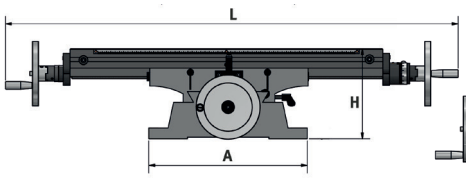

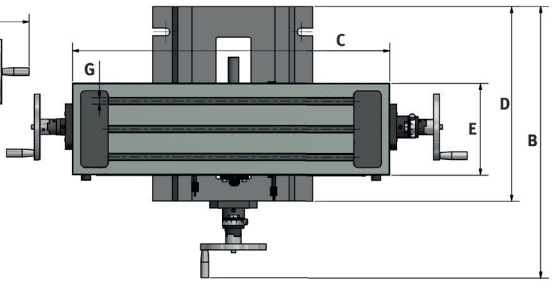

Cross tables KT	Article no.
KT 120	3356595
KT 179	3356596
KT 180	3356591
KT 210	3356600

Workplace mats – for dry and wet areas

Facts that impress in terms of quality, performance and price

- Thickness 14 mm
- Colour anthracite
- Temperature resistant from -35°C to +95°C
- Fire-resistant B1 as per DIN 4102
- Made of polyurethane on polyether basis
- Surface: nubbed
- Underside: nubbed for maximum standing comfort and slip resistance
- 5-year warranty







Work mat	Size: 1,840 x 640 mm	Size: 1,840 x 940 mm	Size: 3,040 x 640 mm	Size: 3,040 x 940 mm
Article no.	6800000	6800005	6800001	6800006
Net weight	6 kg	9 kg	10.5 kg	15 kg

MSU 3 / MSU 4 - Universal machine and tool trolley

Facts that impress in terms of quality, performance and price

- All three ball bearing mounted drawers can be operated with full extension and are equipped with a stop at the end to prevent accidental opening when shunting or transporting
- Stable design
- Lockable with cylinder lock

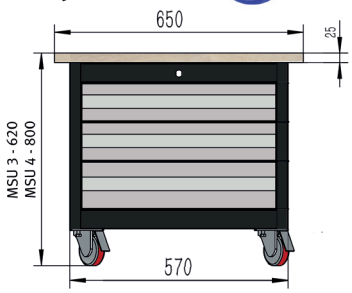



MSU 3

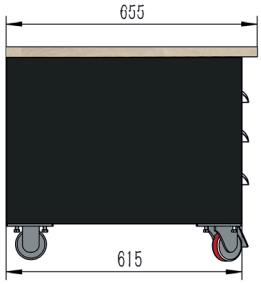



MSU 3

Model	MSU 3	MSU 4
Article no.	3352990	3352991
Load bearing capacity	max. 500 kg	max. 500 kg
Load bearing capacity per drawer	max. 45 kg	max. 45 kg
Dimensions LxWxH	650 x 655 x 620 mm	650 x 655 x 800 mm
Net weight	47 kg	55.5 kg

MSU 4 available from January 2021

Machine vices BME	Article no.
› Easy action	
› Precise jaw guidance	
› Spindle with rolled trapezoid thread	
› Many assembly options on drill table thanks to slots	
BME 85	3052630
BME 100	3052632
BME 120	3052634
BME 150	3052636

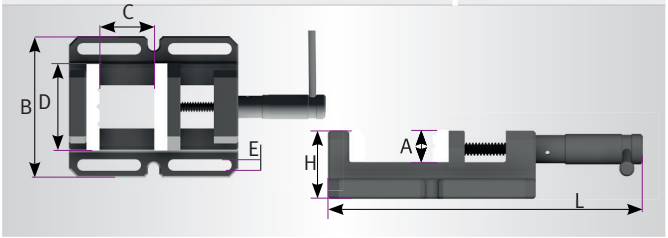

Tech. data		A	C	D	E	L	B	H	kg
BME 85	mm	30	69	85	12	235	132	58	2.8
BME 100	mm	30	100	100	14	288	160	60	4.0
BME 120	mm	30	120	120	14	327	180	63	5.0
BME 150	mm	30	165	150	14	428	220	70	8.0



Machine vices BMP	Article no.
› Easy action	
› Rugged design with prism jaws	
› Spindle with rolled trapezoid thread	
› Many assembly options on drill table thanks to slots	
BMP 100	3052610
BMP 130	3052613
BMP 160	3052616
BMP 200	3052620

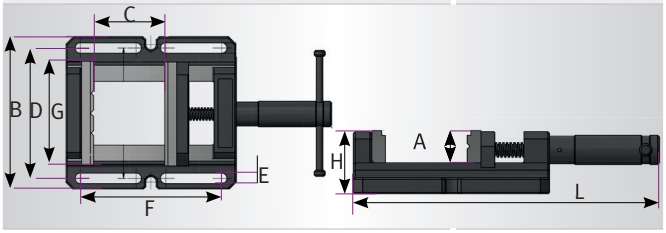

Tech. data		A	G	C	D	E	F	L	B	H	kg
BMP 100	mm	30	100	100	133	13	165	294	162	64	5.6
BMP 130	mm	35	130	120	163	13	177	334	192	69	7.4
BMP 160	mm	40	160	145	205	13	200	420	250	77	13
BMP 200	mm	50	200	195	245	14.5	280	535	290	87	21.6

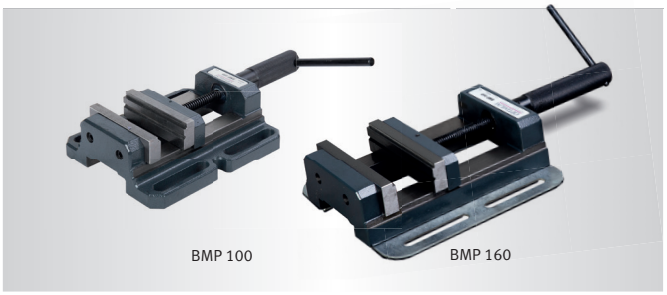

Machine vices BSI	Article no.
› Drill vices in industrial quality	
› Replaceable prism jaws	
› Long guides on moving jaw prevent pivoting	
› Precision ground prism jaws	
› Many assembly options on drill table thanks to slots	
› Premium grey cast	
› Scraped guide surfaces	
BSI 100	3000210
BSI 140	3000214
BSI 200	3000220

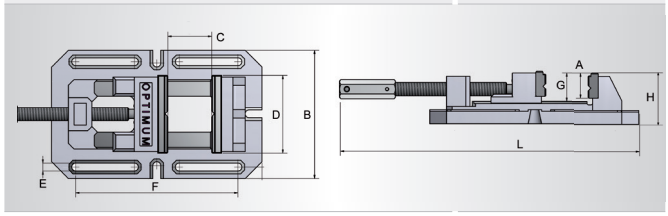

Tech. data		A	C	D	E	F	G	L	B	H	kg
BSI 100	mm	35	110	100	12	216	40	max. 460	170	74	8.7
BSI 140	mm	45	150	140	14	290	50	max. 610	230	93	18
BSI 200	mm	58	200	200	16	406	64	max. 788	290	118	37



Machine vices BSI-Q	Article no.
› Drill vices in industrial quality	
› Quick clamping thanks to quick release	
› Replaceable prism jaws	
› Long guides on moving jaw prevent pivoting	
› Precision ground prism jaws	
› Many assembly options on drill table thanks to slots	
› Premium grey cast . Scraped guide surfaces	
BSI-Q 100	3000230
BSI-Q 140	3000234
BSI-Q 200	3000240

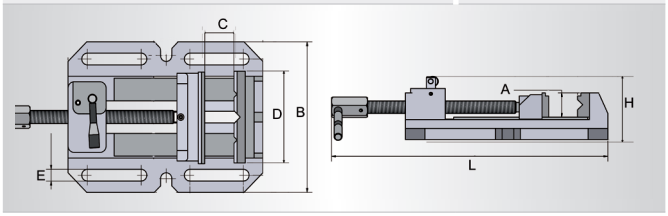

Tech. data		A	C	D	E	L	B	H	kg
BSI-Q 100	mm	30	105	100	12	max. 335	150	95	5.5
BSI-Q 140	mm	40	155	140	14	max. 415	200	100	10.7
BSI-Q 200	mm	55	220	200	16	max. 525	275	125	20.2





The solution for loose rivet nuts

Secure threaded connection for thin wall thicknesses

THERMDRILL®

Verbindungstechnik – Made in Germany

The Thermdrill® method





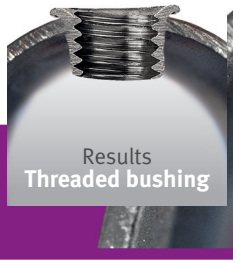



MADE IN GERMANY



In thermal drilling, the friction heat from the existing material is used to create an anti-twist protected bushing without material removal in which a thread is then tapped.

- For aluminium, brass, copper, steel, stainless steel as of 1.0 mm wall thickness
- For use with milling cutters, CNC systems and post drills

www.thermdrill.de

- **Cost savings**
- **Time savings**
- **Maximum safety**

You need

1 Thermal drill



SHAPE
For bushes with collars





CUT
For bushes without collars



Please note: important!

› Made of solid carbide with a special polygon grind

Size	Design	Material thickness (max.)	Art. no.	Material thickness (max.)	Art. no.
M4	short	1.5 mm	3060104	2.0 mm	3060164
	long	2.5 mm	3060124	4.0 mm	3060144
M5	short	2.0 mm	3060105	3.0 mm	3060165
	long	3.0 mm	3060125	4.5 mm	3060145
M6	short	2.0 mm	3060106	3.0 mm	3060166
	long	3.5 mm	3060126	5.0 mm	3060146
M8	short	2.5 mm	3060108	4.0 mm	3060168
	long	4.0 mm	3060128	6.0 mm	3060148
M10	short	2.5 mm	3060110	4.0 mm	3060170
	long	4.5 mm	3060130	6.5 mm	3060150
M12	short	2.5 mm	3060112	4.0 mm	3060172
	long	4.5 mm	3060132	6.5 mm	3060152

Other thread sizes available (also in metric fine and pipe threads)

Tool set = Thermal drill + thread tapper

Size	Design	Type SHAPE Material thickness (max.)	Type SHAPE Art. no.	Type CUT Material thickness (max.)	Type CUT Art. no.
M4	short	1.5 mm	3060024	2.0 mm	3060044
	long	2.5 mm	3060034	4.0 mm	3060054
M5	short	2.0 mm	3060025	3.0 mm	3060045
	long	3.0 mm	3060035	4.5 mm	3060055
M6	short	2.0 mm	3060026	3.0 mm	3060046
	long	3.5 mm	3060036	5.0 mm	3060056
M8	short	2.5 mm	3060028	4.0 mm	3060048
	long	4.0 mm	3060038	6.0 mm	3060058
M10	short	2.5 mm	3060030	4.0 mm	3060050
	long	4.5 mm	3060040	6.5 mm	3060060
M12	short	2.5 mm	3060032	4.0 mm	3060052
	long	4.5 mm	3060042	6.5 mm	3060062

Other thread sizes available (also in metric fine and pipe threads)

2 Thread tapper



with TiN coating and lubricant grooves tolerance 6HX Form C

› Legacy tool fittings can be used

Size	Art. no.
M4 x 0.7	3060184
M5 x 0.8	3060185
M6 x 1.0	3060186
M8 x 1.25	3060188
M10 x 1.25	3060190
M12 x 1.25	3060192

Product features



The details are guide values for application in steel

Size	Rotational speed min	Rotational speed ideal	Motor output mm	Motor output kW	Rotational speed
M4	2300	2600	up to 1.5	1.0	1000
			up to 4.0	1.5	
M5	2200	2500	3.0	1.0	800
			4.5	1.5	
M6	2000	2400	4.0	1.5	650
			5.0	2.0	
M8	1600	2200	4.0	1.5	500
			6.0	2.0	
M10	1500	2000	3.0	1.5	400
			5.0	2.0	

Speed adjustment stainless steel -10%, aluminium +40% (applies to thermal drilling)

3 Basic equipment

NEW



Thermdrill Basic Set	3060004

Contents:
› Open-ended and cable spanner
› Tool holder with cooling ring MT 3
› MT 3 - Adapter with morse taper B16
› MT 2 - Adapter with morse taper B16
› Spring collets (Ø 6/8/10/12 mm)
› Case

Quick change adapter

small (M3-M12)	3050715
large (M8-M20)	3050716

Quick change adapter with B16 collet for thread tapping collet



Collet chuck B16

3060007



Thread tapping oil, 1 litre

3060092

- Including brush
- High-performance oil specially for thread tapping in alu, CU, CUSN, steel, stainless



THERMDRILL Paste, 1 kg

3060090

- Including brush
- Protection against excessive wear.



OPTIMUM®
MASCHINEN - GERMANY

MILLING MACHINES

BENCH MILLING MACHINES

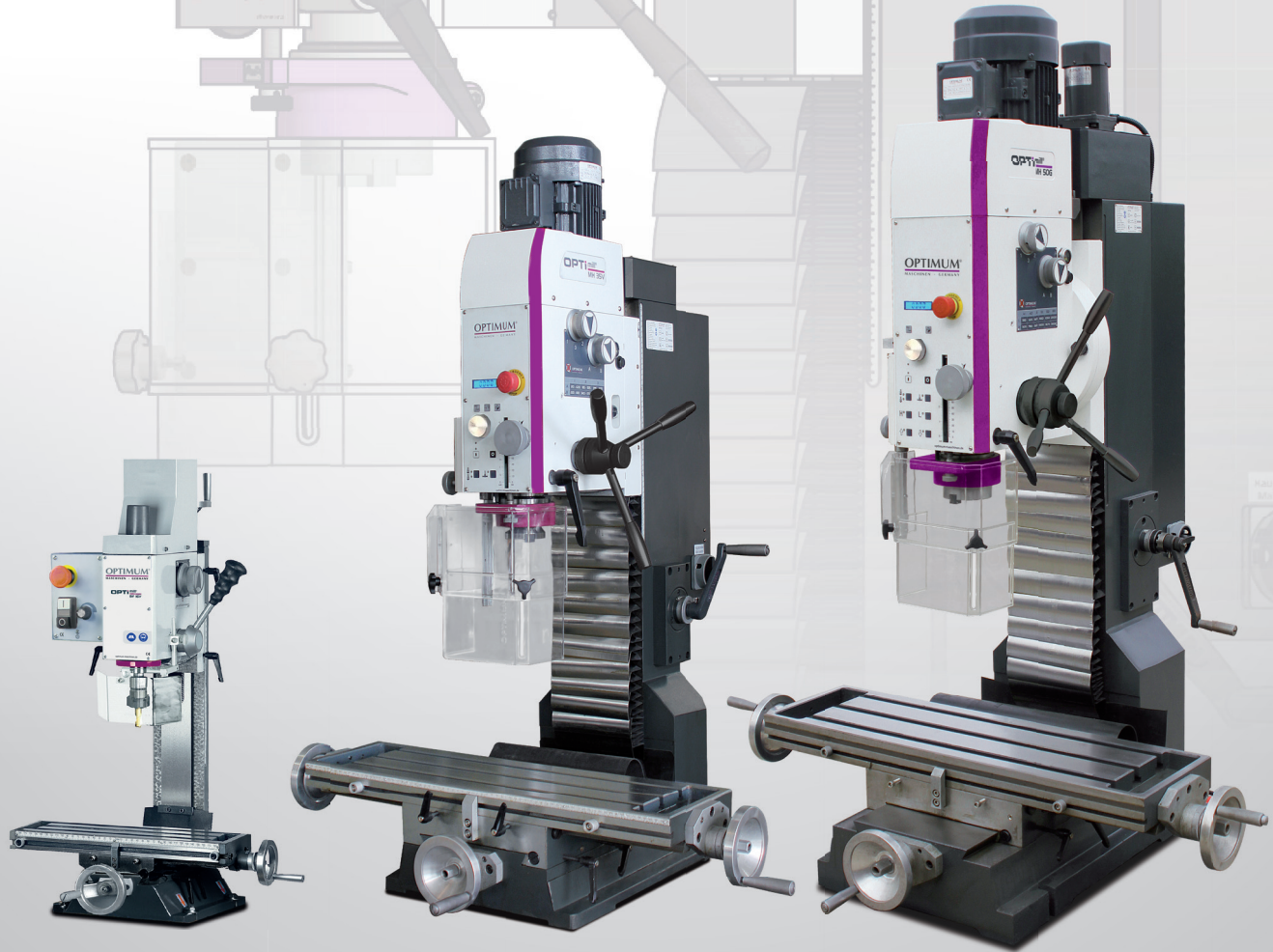

DIY

Small drilling/milling machine with electronic, continuously controllable drive
for model makers

Facts that impress in terms of quality, performance and price

- Versatile deployment options
- Excellent concentricity thanks to tapered roller bearings, ≤ 0.015 mm measured in the spindle sleeve
- Two-speed transmission ratio
- Tool holder MT 2
- EMC filter class C1
- Safety electrical system 24-volt version
- Simple and clear-cut operating unit with on/off switch, potentiometer and emergency-stop shock switch
- Infinitely variable speed from 100 to 3 000 rpm
- Stable column with dovetail guide, adjustable on all 3 axes via V-ledges
- Column can be displaced laterally to extend the range of applications
- Drilling/milling head pivots laterally on both sides through ± 90° to allow for drilling and milling work at angles as required
- Feed spindle play adjustable and re-adjustable
- Height-adjustable protective screen with microswitch for best possible user protection against chips and parts being flung out
- All travel can be read off on scales
- Clean milling work thanks to individually clamping guides
- Precise feed thanks to positioning capable scale rings on all handwheels
- Inexpensive, lasting value

Universal machine substructure MSM 1 and chip tray



› Optionally available
› Chassis dimensions 420 x 340 x 800 mm
› Chip tray dimensions 720 x 470 x 30 mm
› Information on page 153

Cross table



› Solid and generously dimensioned cross table with precision surface finish and T-slots
› Adjustable limit stops
› Longitudinal scale inset in cross table



Fig.: BF 16 Vario with optional accessories

*OPTImill® is a registered brand of Optimum Maschinen Germany GmbH and exclusively used for milling machines

VARIO

Technical specifications, accessories and dimensions

Model	BF 16 Vario
Article no.	3338116
Output	
Electrical connection	230 V / 1 Ph ~50 Hz
Motor output	500 W
Drilling/milling output	
Drilling performance in steel (S235JR)	Ø 16 mm
Continuous drilling performance steel (S235JR)	Ø 12 mm
Max. sensor head size	Ø 52 mm
Max. shaft milling cutter size	Ø 20 mm
Spindle	
Spindle sleeve stroke	50 mm
Spindle seat	MT 2 / M10
Throat	170 mm
Drawbar	M 10
Drilling/milling head	
Spindle speeds	100 - 3 000 rpm
Speeds	2-speed, electronic speed control
Pivot range	± 90°
Cross table	
Length x width	400 x 120 mm
T-slot size / distance / amount	10 mm / 35 mm / 3
Clearance spindle to table	275 mm
Travel	
X axis	220 mm
Y axis	160 mm
Z axis	210 mm
Dimensions and weight	
Length x width x height	505 x 465 x 795 mm
Net weight	62 kg

Dimensions

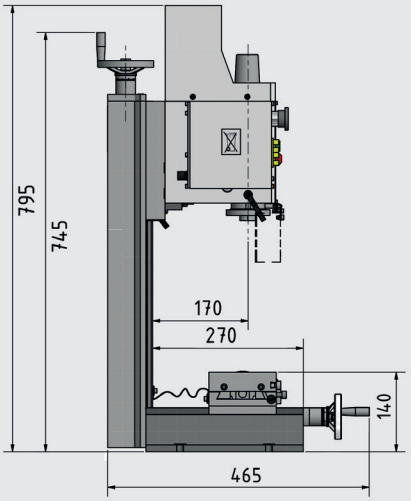

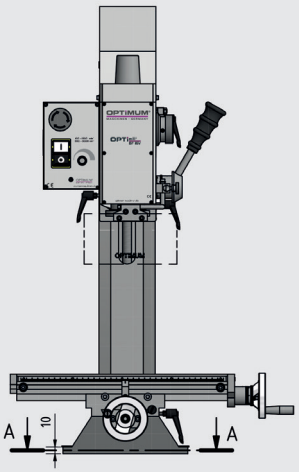

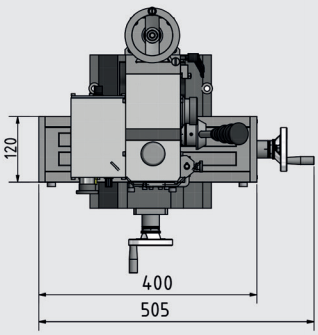

Accessories	Article no.
Digital position display DRO 5	3383975
Factory assembly DRO 5	9000420
Magnetic strip per metre	3383980
› Information on the digital position display on page 231	

Universal machine substructure MSM 1	3353000
Chip tray	3352999
Levelling platen SE 1 (4 units required)	3381012
› Information on the Universal machine substructure MSM 1 on page 153	

Accessories	Article no.
Collet kit MT 2 / M10, 5-part, **direct clamping**	3351980
Collet kit ER 25, 15-part	3441109
Collet chuck set MT 2/ ER 25	3352052
Collet chuck set MT 2/ ER 32	3352053
End mill set HSS TiN-coated **12-part**	3352250
End mill set HSS TiN-coated **20-part**	3352255
Quick-action drill chuck DKC 13 / 0-13 mm	3050632
Assortment of clamping tools size 8	3352015
T-slot nut M 8 / 10 mm	3353020
Universal coolant unit 230 V	3351999
Coolant mist lubricator MMC 1 with magnetic holder	3356663
Coolant hose KMS 2	3356660
› More accessories for milling machines from page 139	

Scope of delivery
› Tapered mandrel MT 2/B16
› Drawbar M10
› Operating tool

Note: The lathe (frequency converter) complies with the DIN EN 55011 standard: class C1.
Important information on operation of machines with frequency converters on page 323.

TRADES

Sturdy drilling/milling machines with electronically continuously variable drive and manual spindle sleeve feed.

MH 20VL with longer stroke on the X axis.
MH 20VLD with digital position display DRO 5

Facts that impress in terms of quality, performance and price

- Precision workmanship
- Excellent concentricity thanks to tapered roller bearings, ≤ 0.015 mm measured in the spindle sleeve
- Motor with two-speed gear ratio for powerful transmission of motor output
- Powerful DC motor with permanent current monitoring
- Air filter for motor
- New electrics with improved motor protection (extended PCB and PCB for EMC)
- Safety electrical system 24-volt version
- Control electronics with integrated relay control
- Clear-cut control panel with user-friendly foil keyboard
- Easily readable digital display for speed and drilling depth
- Solid and generously dimensioned cross table with precision surface finish with T-slots and adjustable cleats
- Adjustable limit stops
- Sturdy dovetail guide with adjustable V-ledges
- Feed spindle play adjustable and re-adjustable
- Emergency stop button
- Drilling/milling head pivots through ±60°
- Right-handed/left-handed rotation
- Machine lamp
- Two-row angular contact ball bearings in the axes, adjustable without play
- Height-adjustable protective screen with microswitch for best possible user protection against chips and parts being flung out
- Preparation for mounting the DRO5 digital position display on the X and Y axis (slot prepared for retrofitting magnetic strips)
- Lockable main switch

MH 20VLD

- With digital position display DRO 5

Energy chain



› Cable guidance easy on material

Feed



› Manual fine feed

Heat sink



› Heat sink for cooling the electronics
› Good heat transfer capability



Fig.: MH 20VL with optional accessories

*OPTImill® is a registered brand of Optimum Maschinen Germany GmbH and exclusively used for milling machines

Technical specifications, accessories and dimensions

Model	MH 20V	MH 20VL
Article no.	3338131	3338132
Model		**MH 20VLD**
Article no.	-	3338133

Output		
Electrical connection	230 V / 1 Ph ~50 Hz	
Motor output	750 W	
Drilling/milling output		
Drilling performance in steel (S235JR)	Ø 16 mm	
Continuous drilling performance steel (S235JR)	Ø 12 mm	
Max. sensor head size	Ø 52 mm	
Max. shaft milling cutter size	Ø 20 mm	
Spindle		
Spindle sleeve stroke	50 mm	
Spindle sleeve diameter	Ø 60 mm	
Spindle seat	MT 2	
Drawbar	M10	
Throat	170 mm	
Drilling/milling head		
Spindle speeds	100 - 3 000 rpm	
Speeds	2-speed, electronic speed control	
Pivot range	± 60°	
Cross table		
Length x width	510 x 180 mm	700 x 180 mm
T-slot size / distance / amount	12 mm / 63 mm / 3	
Cross table max. load bearing capacity	40 kg	50 kg
Clearance spindle to table	255 mm	
Travel		
X axis	280 mm	480 mm
Y axis	175 mm	
Z axis	210 mm	
Dimensions and weight		
Length x width x height	750 x 650 x 820 mm	770 x 714 x 917 mm
Net weight	94 kg	99 kg

Accessories	Article no.
Quick-action drill chuck DKC 13 / 0-13 mm	3050632
Collet kit MT 2 / M10, 5-part, **direct clamping**	3351980
Collet kit ER 25, 15-part	3441109
End mill set HSS TiN-coated, **12-part**	3352250
End mill set HSS TiN-coated, **20-part**	3352255
Collet kit ER 25	3441109
Assembly kit for DRO5 on MH20V	3383990
Vibration damping machine base SE 55 (4 units required)	3352981
Universal machine substructure MSM 1 (Information page 153)	3353000
Chip tray	3352999
› Information on the Universal machine substructure and chip tray on page 153	
› More accessories for milling machines from page 139	

Machine vises	Article no.
FMS 100	3354100
FMSN 100	3354110
VMQ 80	3354180
VMQ 100	3354181
MV3-75	3354175
ZAS 50	3354170
› Informationen from page 139	

Note: The milling machines (frequency inverters) comply with standard DIN EN 55011: class C2.
Important information on operation of machines with frequency converters on page 323.

Dimensions

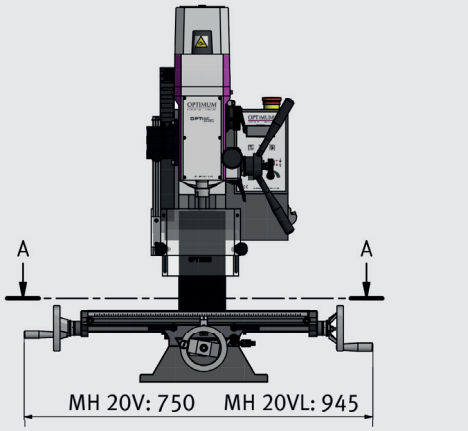

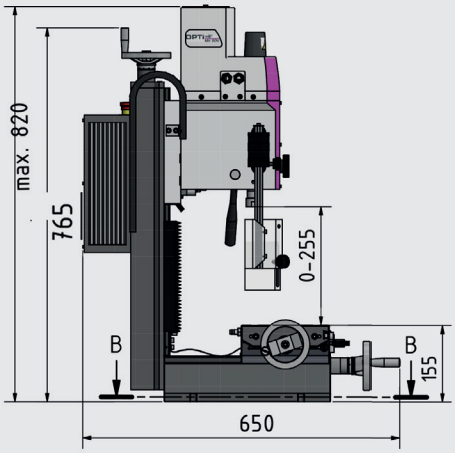

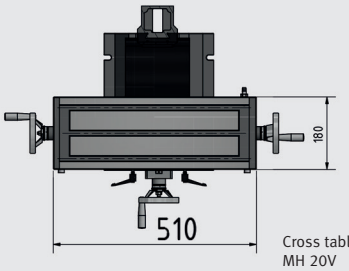

Cross table MH 20V

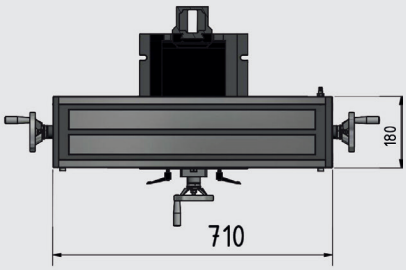

Cross table MH 20VL/VLD

Scope of delivery

- Tapered mandrel MT 2/B16
- Drawbar M10
- Operating tool

TRADES

Sturdy drilling/milling machines with continuously variable electronic speed control.

MH 22VD with digital position display DRO 5

Facts that impress in terms of quality, performance and price

- Precision workmanship
- Excellent concentricity thanks to tapered roller bearings, ≤ 0.015 mm measured in the spindle sleeve
- Motor with two-speed gear ratio for powerful transmission of motor output
- Powerful DC motor with permanent current monitoring
- Safety electrical system 24-volt version
- Control electronics with integrated relay control
- Clear-cut control panel with user-friendly foil keyboard
- Easily readable digital display for speed and drilling depth
- Solid and generously dimensioned cross table with precision surface finish with T-slots and adjustable cleats
- Adjustable limit stops
- Sturdy dovetail guide with adjustable V-ledges
- Fine feed
- Emergency stop button
- Drilling/milling head pivots through ±60°
- Right-handed/left-handed rotation
- Machine lamp
- Bore for easy oiling of the trapezoidal spindle
- Two-row angular contact ball bearings in the axes, adjustable without play
- Feed spindle play adjustable and re-adjustable
- Height-adjustable protective screen with microswitch for best possible user protection against chips and parts being flung out
- X, Y and Z axis with slot prepared for retrofitting of the magnetic strips
- Gaiter as guide protection
- Mechanical quick change clamping system

MH 22VD

- With digital position display DRO 5

Mechanical quick change clamping system



› Milling head equipped with spring collet for pull studs BT20x45°
› Easy to change by unlocking the mechanical safeguard and moving the spindle sleeve lever upward

Energy chain



› Cable guidance easy on material

MH 22VD: DRO 5



› Four-line LCD display
› User-friendly menu navigation

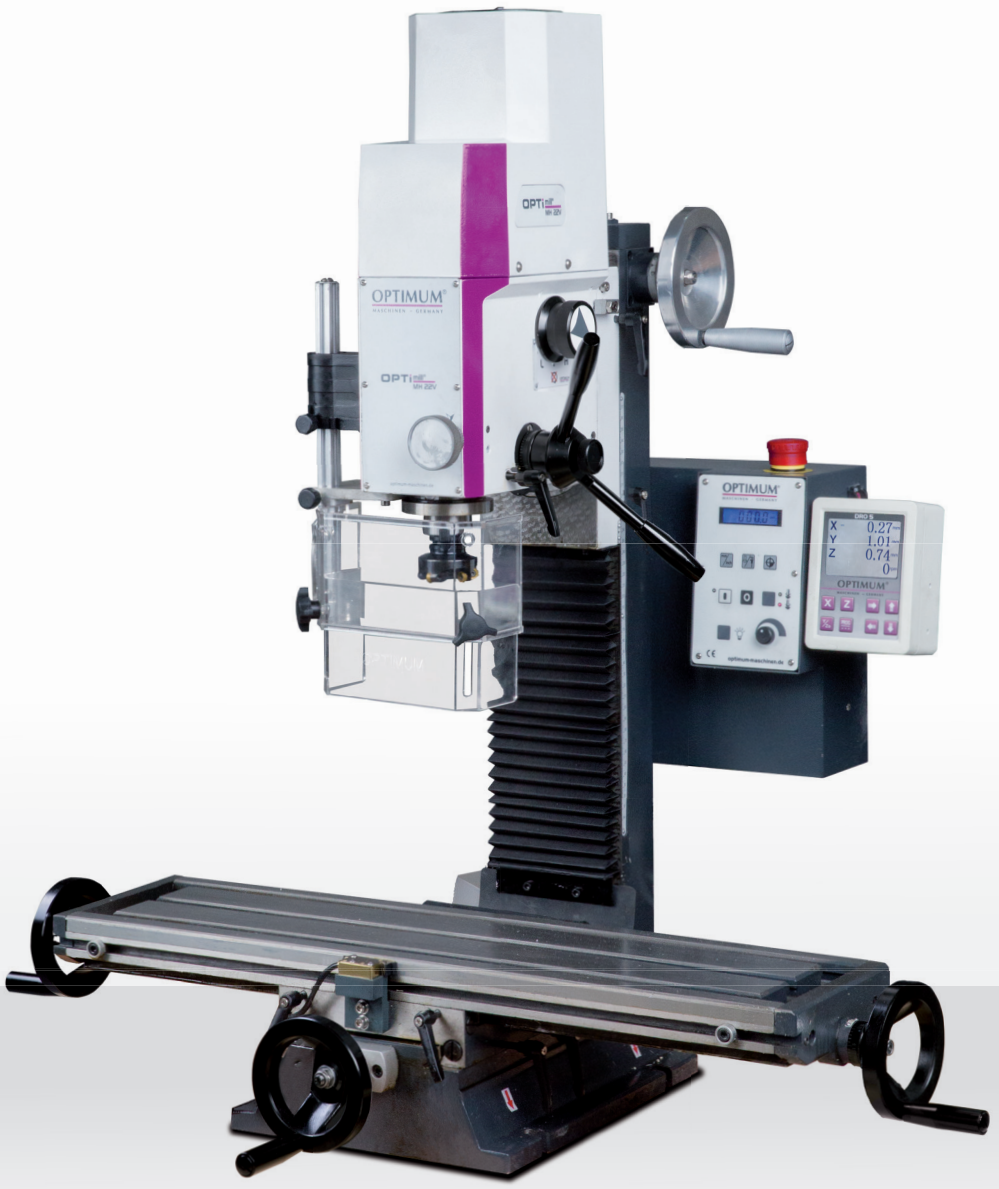

Fig.: MH 22VD with optional accessories

*OPTImill® is a registered brand of Optimum Maschinen Germany GmbH and exclusively used for milling machines

DPA VARIO

Technical specifications, accessories and dimensions

Model	MH 22V
Article no.	3338135
Model	**MH 22VD**
Article no.	3338136

Output	
Electrical connection	230 V / 1 Ph ~50 Hz
Motor output	950 W
Drilling/milling output	
Drilling performance in steel (S235JR)	Ø 20 mm
Continuous drilling performance steel (S235JR)	Ø 16 mm
Max. sensor head size	Ø 52 mm
Max. shaft milling cutter size	Ø 12 mm
Spindle	
Spindle sleeve stroke	45 mm
Spindle sleeve diameter	Ø 60 mm
Spindle seat	BT 20
Throat	170 mm
Drilling/milling head	
Spindle speeds	90 - 3 000 rpm
Speeds	2-speed, electronic speed control
Pivot range	± 60°
Cross table	
Length x width	700 x 180 mm
T-slot size / distance / amount	12 mm / 63 mm / 3
Cross table max. load bearing capacity	50 kg
Clearance spindle to table	360 mm
Travel	
X axis	480 mm
Y axis	175 mm
Z axis	270 mm
Dimensions and weight	
Length x width x height	745 x 650 x 950 mm
Net weight	120 kg

Dimensions

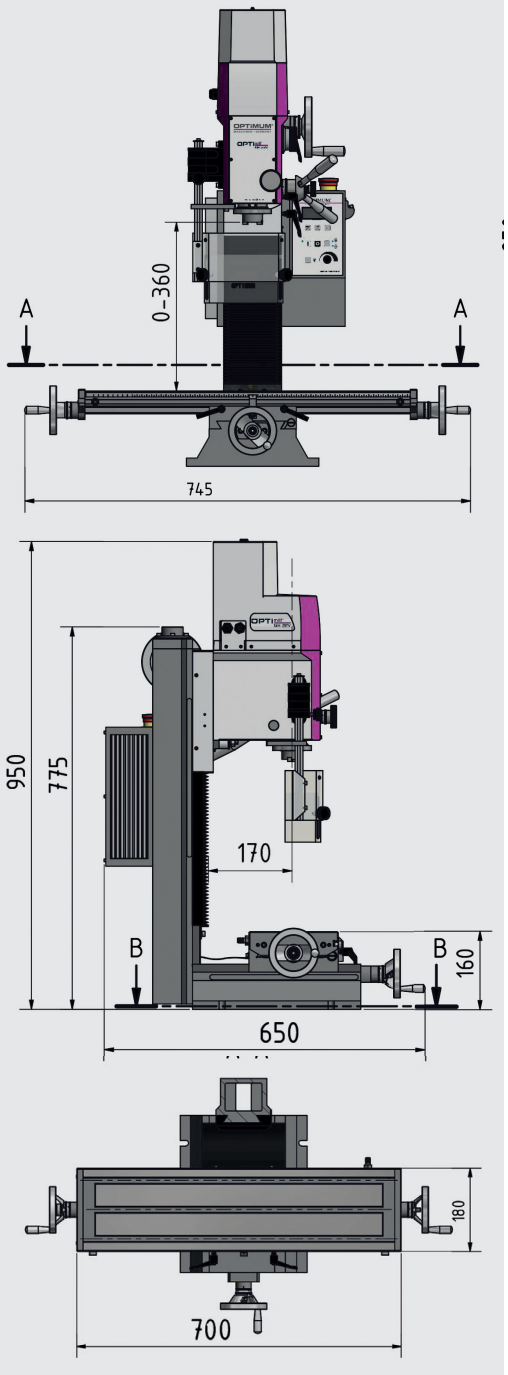

Accessories	Article no.
Starter set BT 20 (information on pagepage 154)	3353281
Milling head holder Ø 16 mm BT 20	3352728
Chuck adapter BT 20 - B16	3352727
Weldon holder Ø 6 mm BT 20	3352732
Weldon holder Ø 8 mm BT 20	3352734
Weldon holder Ø 10 mm BT 20	3352736
Weldon holder Ø 12 mm BT 20	3352738
Collet chuck ER 16	3352741
Spring collet holder spanner ER 16	3352742
Collet kit ER 16, 12-part , 1 - 10 mm	3440282
Pull stud Optimum BT 20	3352726
Quick-action drill chuck DKC 13 / 0-13 mm	3050632
End mill set HSS TiN-coated	3352250
Assembly kit for DRO5 for MH22V	3383990
Vibration damping machine base SE 55 (4 units required)	3352981
Machine chassis MSM 1 (information page 153)	3353000
Chip tray	3352999
› Information on the machine chassis and chip tray on page 153	
› More accessories for milling machines from page 139	

Scope of delivery

› Operating tool

Machine vises	Article no.
FMS 100	3354100
FMSN 100	3354110
VMQ 80	3354180
VMQ 100	3354181
MV3-75	3354175
ZAS 50	3354170
› Informationen from page 139	

Note: The milling machines (frequency inverters) comply with standard DIN EN 55011: class C2.
Important information on operation of machines with frequency converters on page 323.

TRADES

Sturdy milling machines with continuously variable electronic speed control.

MH 25SV with stepper motors and digital position display DRO 5

Facts that impress in terms of quality, performance and price

- Inverter motor
- Precision workmanship
- Clear-cut control panel with user-friendly foil keyboard
- Particularly smooth action
- Counterweight facilitates Z axis adjustment
- Variable speed control
- Easy tool changing thanks to tool quick clamping system
- Groove prepared for easy retroactive mounting of magnetic strips
- Feed spindles can be adjusted thanks to adjustable spindle nuts
- Sturdy dovetail guide, precision ground and shaved with adjustable cleats
- Angular ball bearings on the axes
- Gear head pivots through ± 45°
- Right-handed/left-handed rotation
- Height-adjustable, large protective screen with micro switch
- Limit switches for all three axes

MH 25V:

- Easily readable speed display in milling head

MH 25SV:

- Continuously variable feed on all axes
- Rapid motion X/Y axis for fast positioning
- Digital 3-axis position display DRO 5
- Feed cut-off at end position
- Transportable control panel
- The feed switches off when the spindle is stationary

Mechanical quick change clamping system



› Milling head equipped with spring collet for pull studs BT30x45°
› Easy to change by unlocking the mechanical safeguard and moving the spindle sleeve lever upward

Operating panel

› User-friendly membrane keyboard with touch and switch control
› Easy to clean
› Excellent operability



› Control panel MH 25SV
› Good mobility thanks to ability to remove control panel from holder



› Control panel MH 25V

Energy chain

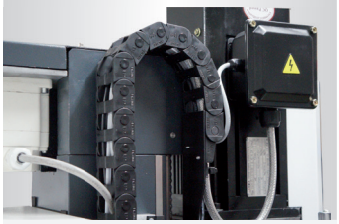

› cable guidance easy on material

SIEMENS inverter



SINAMICS V20

› Energy-saving features
› Advanced cooling
› Painted electronics assemblies

Fig.: MH 25SV

*OPTImill® is a registered brand of Optimum Maschinen Germany GmbH and exclusively used for milling machines

DPA VARIO

Technical specifications, accessories and dimensions

Model	MH 25V	MH 25SV
Article no.	3338155	3338160
Output		
Electrical connection	230 V / 1 Ph ~50 Hz	
Total rated value	2 kW	
Milling spindle		
Drive motor	1.5 kW	
Drive motor torque	10 Nm	
Drilling/milling output		
Max. sensor head size	Ø 50 mm	
Max. shaft milling cutter size	Ø 25 mm	
Spindle		
Spindle seat	BT 30	
Throat	185 mm	
Drilling/milling head		
Spindle speeds	200 - 4 000 rpm	
Speeds	Electronic speed control	
Pivot range	45°	
Cross table		
Length x width	620 x 180 mm	
T-slot size / distance / amount	12 mm / 50 mm / 3	
Cross table max. load bearing capacity	30 kg	
Clearance spindle to table	300 mm	
Travel		
X axis	manual 400 mm	automatic ~380 mm manual 400 mm
Y axis	manual 210 mm	automatic ~130 mm manual 210 mm
Z axis	manual 270 mm	automatic ~190 mm manual 270 mm
Torque		
X/Y/Z axis	-	2.2 / 2.2 / 4.2 Nm
Travel speeds		
X axis	-	150 - 930 mm/min.
Y axis	-	100 - 580 mm/min.
Z axis	-	80 - 450 mm/min.
Dimensions and weight		
Length x height	970 x 1 025 mm	
Width	955 mm	975 mm
Net weight	192 kg	200 kg

Dimensions

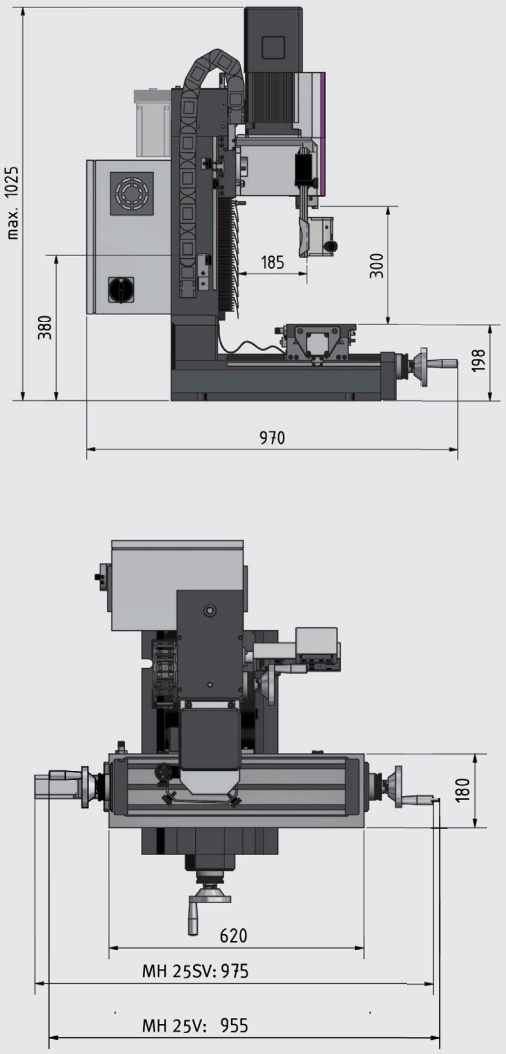

Accessories	Article no.
Milling head holder Ø 22 mm	3353306
Chuck 1 - 13 mm	3536303
Weldon holder Ø 6 mm	3353310
Weldon holder Ø 8 mm	3353311
Weldon holder Ø 10 mm	3353312
Weldon holder Ø 12 mm	3353313
Weldon holder Ø 16 mm	3353314
Weldon holder Ø 20 mm	3353315
Adapter BT 30 - MT 2	3353305
Spring collet holder ER 32	3353304
Spring collet holder spanner ER 32	3353307
Collet kit ER 32	3441122
Height-adjuster	3536290
Assembly and tool adjustment gauge	3536193
Pull stud 40 x 45° M12	3353302
Pull stud DIN2080 M12	3536177
Assortment of clamping tools size 10, 58-part size	3352016
Universal machine substructure MSM 2 (Information page 153)	3353009
› More accessories for milling machines from page 139	

Accessories	Article no.
Starter set BT 30	3353282
› Milling head holder Ø 22 mm	
› Chuck 1 - 13 mm	
› 2 units Weldon Ø 6 mm and 20 mm	
› 1 unit each Weldon Ø 8 / 10 / 12 / 16mm	
› Adapter sleeve BT 30 / MT 2	
› 4 units spring collet holder ER 32	
› Spring collet key ER 32	
› 18-part Collet kit ER 32	
› Height-adjuster	
› Assembly and tool adjustment gauge	
› 14x pull studs	
› Taper squeegee	

Machine vises	Article no.
FMS 100	3354100
VMQ 80	3354180
MV3-75	3354175
ZAS 50	3354170
› Informationen from page 139	

Note: The milling machines (frequency inverters) comply with standard DIN EN 55011: class C2.
Important information on operation of machines with frequency converters on page 323.

TRADES

Universal precision drilling/milling machine with two-speed drive motor and gear shift for optimum power transfer

Facts that impress in terms of quality, performance and price

- Heavy, solid cast design
- Two-stage industrial quality electric motor
- Smooth action due to polished gearwheels running in an oil sump
- Solid and generously dimensioned cross table with precision surface finish with T-slots and adjustable cleats
- Drilling depth stop
- Thread tapping function
- Manual spindle sleeve feed with fine feed
- Feed spindle play adjustable and re-adjustable
- Operation-friendly control panel with emergency stop shock switch
- Column with hand-honed dovetail guide
- Height-adjustable, large protective screen with micro switch
- Large speed range from 95 - 3 200 rpm thanks to 12 switchable speeds

Thread tapping mode

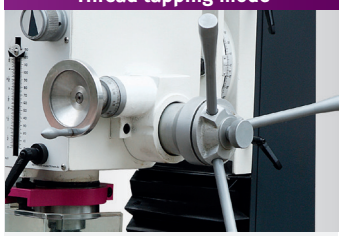

› The motor is activated by moving the spindle sleeve down
› When the preset depth is reached, the spindle reverses
› The machine thread tapping drill moves back out of the workpiece
› When the spindle sleeve has moved in to the switching point, the spindle rotation is stopped

Gearhead



› The drilling/milling head can be swivelled through 45° to the left and right

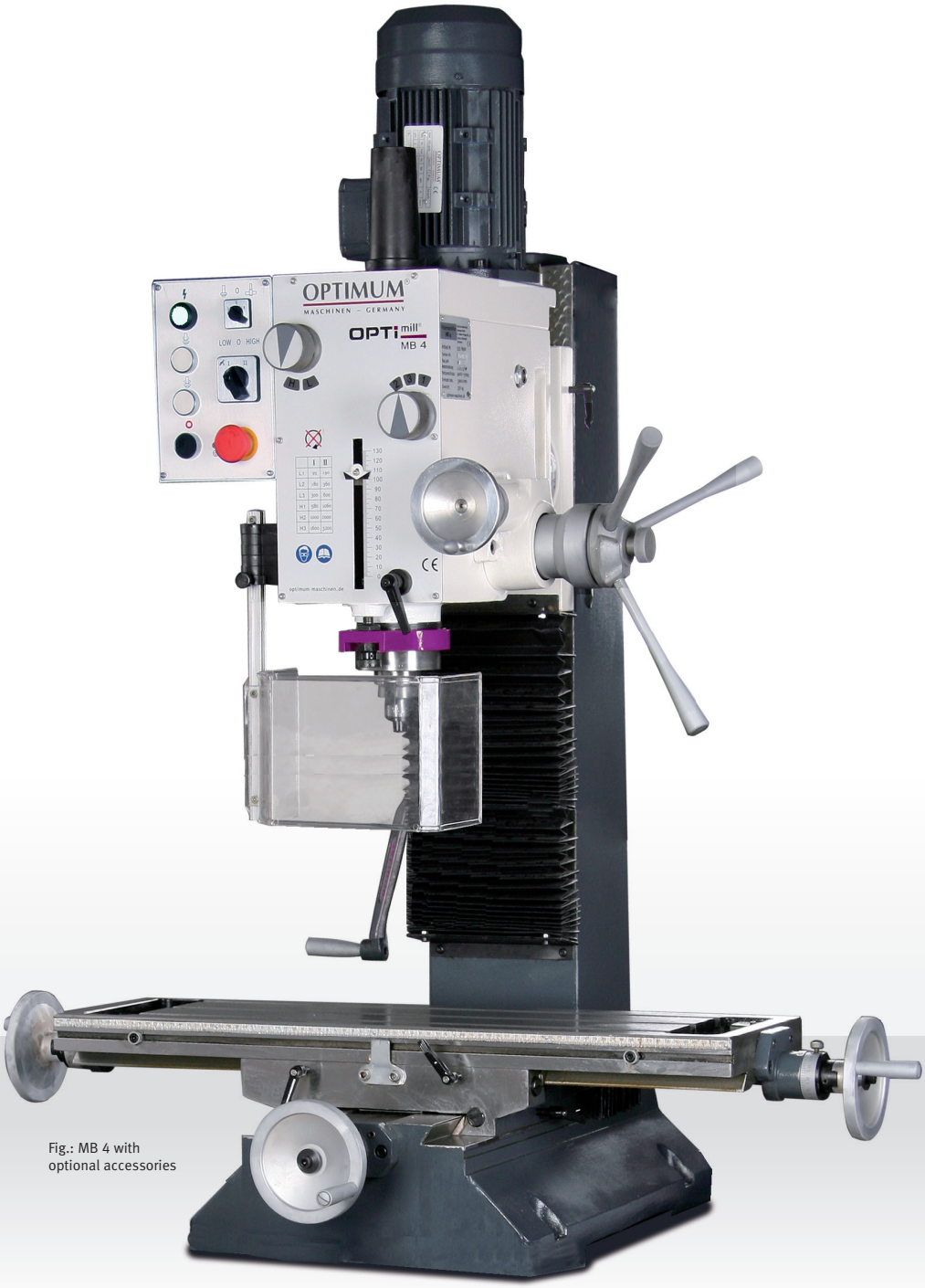

Fig.: MB 4 with optional accessories

*OPTImill® is a registered brand of Optimum Maschinen Germany GmbH and exclusively used for milling machines

Technical specifications, accessories and dimensions

Model	MB 4
Article no.	3338450
Output	
Electrical connection	400 V / 3 Ph ~50 Hz
Motor output	1.1 / 1.5 kW
Drilling/milling output	
Drilling performance in steel (S235JR)	Ø 32 mm
Continuous drilling performance steel (S235JR)	Ø 28 mm
Max. sensor head size	Ø 63 mm
Max. shaft milling cutter size	Ø 28 mm
Spindle	
Spindle sleeve stroke	120 mm
Spindle seat	MT 4
Spindle sleeve diameter	75 mm
Throat	275 mm
Drawbar	M16
Drilling/milling head	
Spindle speeds	95 - 3 200 rpm
Speeds	2 x 6 speeds
Pivoting	± 45°
Cross table	
Length x width	800 x 240 mm
T-slot size / distance / amount	14 mm / 63 mm / 3
Cross table load bearing capacity	80 kg
Clearance spindle to table	460 mm
Travel	
X axis	450 mm
Y axis	195 mm
Z axis	430 mm
Dimensions and weight	
Length x width x height	1 155 x 775 x 1 420 mm
Net weight	320 kg

Accessories	Article no.
Parallel shim set, 20-part	3354001
Horizontal-vertical rotary indexing table RT 100	3356110
Horizontal-vertical rotary indexing table RT 150	3356150
Horizontal-vertical rotary indexing table RTE 165	3356365
Height-adjustable tailstock RST 1	3356155
Assortment of clamping tools size 12, 58-part size	3352017
T-slot nut M 12 / 14 mm	3353025
Blank holder 14 mm	3352031
End mill set HSS TiN-coated **12-part**	3352250
End mill set HSS TiN-coated **20-part**	3352255
Copy and planing knife MT 4 Ø 63 mm	3350214
Bore head set MT 4/B16	3352125
Arbour for drill chuck MT 4/B16	3350304
Collet chuck MT 4/M16	3352094
Thread tapping chuck MT 4/ M3 - M12	3050705
Thread tapping chuck MT 4/ M8 - M20	3050706
Steel chassis MSM 3	3353014
Vibration damping machine base SE 55 (4 units required)	3352981
Universal table feed V 99S (information page 151)	3352021
Assembly kit V 99S - X axis	3352035
Universal coolant unit 230 V	3351999
Coolant mist lubricator MMC 1 with magnetic holder	3356663
Coolant hose KMS 2	3356660

› More accessories for milling machines from page 139
› Extension/accessories for coolant system page 320

Dimensions

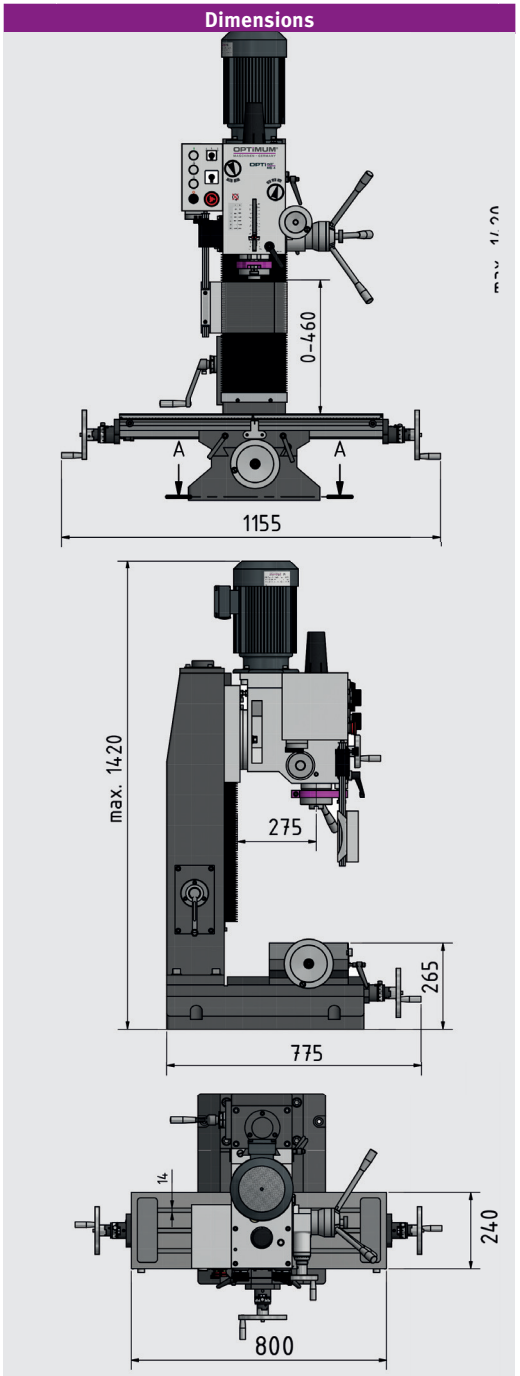

Scope of delivery

› Reduction sleeve MT 4 - MT 3
› Drawbar M16
› Operating tool

Machine vises	Article no.
FMS 100	3354100
FMS 125	3354125
FMSN 125	3354120
VMQ 100	3354181
MV3-75	3354175
DAS 100	3355500
ZAS 50	3354170

› Informationen from page 139

TRADES

Universal precision drilling/milling machines with manual gearbox. MH 35V with electronically controlled drive.

Facts that impress in terms of quality, performance and price

- Excellent concentricity thanks to tapered roller bearings, better than 0.015 mm measured in the spindle sleeve
- Solid and generously dimensioned cross table with precision surface finish and T-slots
- Control panel with user-friendly dirt and water resistant foil keyboard
- Easily readable digital display
- Drilling depth stop
- Right-handed/left-handed rotation
- Thread tapping mode
- Rotary pushbutton on control panel for adjusting the drilling depth, optionally in mm or inches, with zero point
- Height-adjustable protective screen with microswitch for best possible user protection against chips and parts being flung out
- Gear head pivots through ± 30°
- Heavy, stable and solid column made of high-quality grey cast iron, with ground and honed dovetail guide for high stability and precision as well as adjustable cleats
- Feed spindle play adjustable and re-adjustable
- Z axis with slatted, stainless steel protective cover
- Optional, solid, heavy steel chassis MSM 3 (Article No.: 3353014) ensures stability

MH 35G:
- Two-speed industrial motor and 6 additional gears

MH 35V:
- 6 speeds, electronically controlled
- Digital speed display

Energy chain

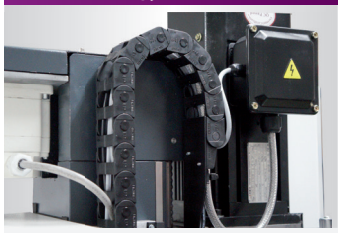

› cable guidance easy on material

SIEMENS inverter



SINAMICS V20
› Energy-saving features
› Advanced cooling
› Painted electronics assemblies

Mechanical quick change clamping system



› The milling head is equipped with spring collet for pull stud BT30x45°
› Easy to change by unlocking the mechanical safeguard and moving the spindle sleeve lever upward

Digital Display



› Depth selection optionally in mm or inch and zero point freely adjustable via the display
› Rev counter (MH 35V only)



Fig.: MH 35V

*OPTImill® is a registered brand of Optimum Maschinen Germany GmbH and exclusively used for milling machines

VARIO

Technical specifications, accessories and dimensions

Model	MH 35G	MH 35V**
Article no.	3338165	3338170
Output		
Electrical connection	400 V / 3 Ph ~50 Hz	
Motor Power	1.1 / 1.5 kW	1.5 kW
Drilling/milling output		
Drilling performance in steel (S235JR)	Ø 32 mm	
Continuous drilling performance steel (S235JR)	Ø 28 mm	
Max. sensor head size	Ø 80 mm	
Max. shaft milling cutter size	Ø 28 mm	
Spindle		
Spindle sleeve stroke	90 mm	
Spindle seat	BT 30	
Spindle sleeve diameter	68 mm	
Throat	215 mm	
Drilling/milling head		
Spindle speeds	220 - 3 100 rpm	50 - 3 260 rpm
Speeds	2 x 6 speeds	6 speeds Electronically controlled
Pivot range	± 30°	
Cross table		
Length x width	750 x 210 mm	
T-slot size / distance / amount	12 mm / 63 mm / 3	
Cross table max. load bearing capacity	170 kg	
Clearance spindle to table max.	440 mm	
Travel		
X axis	450 mm	
Y axis	200 mm	
Z axis	460 mm	
Dimensions and weight		
Length x width x height	850 x 1 030 x 1 340 mm	
Net weight	318 kg	

Dimensions

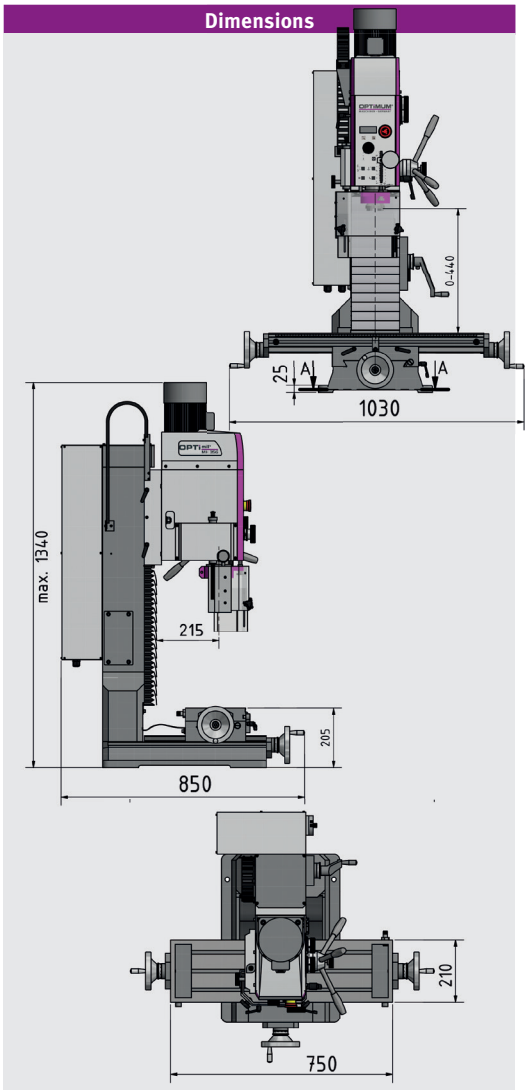

Accessories	Article no.
Chuck adapter **BT 30/B16**	3353308
Milling head holder BT 30 Ø 22 mm	3353306
Quick clamping drill chuck 1 - 13 mm	3536333
Weldon holder Ø 6 mm	3353310
Weldon holder Ø 8 mm	3353311
Weldon holder Ø 10 mm	3353312
Weldon holder Ø 12 mm	3353313
Weldon holder Ø 16 mm	3353314
Weldon holder Ø 20 mm	3353315
Adapter BT 30 - MT 2	3353305
Spring collet holder ER 32	3353304
Spring collet holder spanner ER 32	3353307
Collet kit ER 32	3441122
Height-adjuster	3536290
Assembly and tool adjustment gauge	3536193
Taper squeegee	3353301
Pull stud 40 x 45° M12	3353302
Universal table feed V 99S (information page 151)	3352021
Assembly kit V 99S - X axis	3352035
Assortment of clamping tools size 10, 58-part size	3352016
Steel chassis MSM 3 (information page 153)	3353014
Vibration damping machine base SE 55 (4 units required)	3352981
› More accessories for milling machines from page 139	

Scope of delivery

› Operating tool

Machine vises	Article no.
FMS 125	3354125
VMQ 100	3354181
MV3-75	3354175
DAS 100	3355500
ZAS 50	3354170

Accessories	Article no.
Starter set BT 30	3353282
› Milling head holder Ø 22 mm	
› Quick clamping drill chuck 1 - 13 mm	
› 2 units each Weldon Ø 6 mm and 20 mm	
› 1 unit each Weldon Ø 8 / 10 / 12 / 16 mm	
› Adapter BT 30 - MT 2	
› 4 units spring collet holder ER 32	
› Spring collet key ER 32	
› 18-part Collet kit ER 32	
› Height-adjuster	
› Assembly and tool adjustment gauge	
› 14x pull studs	
› Taper squeegee	

Note: The milling machines (frequency inverters) comply with standard DIN EN 55011: class C2.
Important information on operation of machines with frequency converters on page 323.

TRADES

Universal precision drilling-milling machines with manual gearbox and motorised Z-axis height adjustment. MH 50V with electronically controlled drive.

Facts that impress in terms of quality, performance and price

- Excellent concentricity thanks to tapered roller bearings, better than 0.015 mm measured in the spindle sleeve
- Gears in oil bath with polished, hardened gear wheels
- Control panel with user-friendly dirt and water resistant foil keyboard
- Rotary pushbutton on control panel for adjusting the drilling depth, optionally in mm or inches, with zero point
- Easily readable digital display
- Easily readable spindle sleeve display in milling head
- Drilling depth stop
- Right-handed/left-handed rotation
- Thread tapping mode
- Electrical milling head height adjustment
- Manual fine feed
- Heavy, sturdy and solid columns made of premium cast material with ground and shaven dovetail guide for excellent stability and precision
- Gear head pivots through ± 30°
- Z axis with slatted, stainless steel protective cover
- Adjustable cleats
- Feed spindle play adjustable and re-adjustable
- Height-adjustable protective screen with microswitch for best possible user protection against chips and parts being flung out
- Optional, solid, heavy steel chassis MSM 4 (Article No.: 3353015) ensures stability

MH 50G:

- Two-speed industrial motor and 6 additional gears

MH 50V:

- 6 speeds, electronically controlled
- Rev counter

Energy chain



› cable guidance easy on material

SIEMENS inverter



SINAMICS V20

› Energy-saving features
› Advanced cooling
› Painted electronics assemblies

Mechanical quick change clamping system



› The milling head is equipped with spring collet for pull stud BT40x45°
› Easy to change by unlocking the mechanical safeguard and moving the spindle sleeve lever upward

Digital Display



› Depth selection optionally in mm or inch and zero point freely adjustable via the display
› Rev counter (MH 50V only)



Figure: MH 50G

*OPTImill® is a registered brand of Optimum Maschinen Germany GmbH and exclusively used for milling machines

VARIO

Technical specifications, accessories and dimensions

Model	MH 50G	MH 50V**
Article no.	3338180	3338185
Output		
Electrical connection	400 V / 3 Ph ~50 Hz	
Motor output	1.5 / 2.2 kW	2.2 kW
Drilling/milling output		
Drilling performance in steel (S235JR)	Ø 38 mm	
Continuous drilling performance steel (S235JR)	Ø 32 mm	
Max. sensor head size	Ø 80 mm	
Max. shaft milling cutter size	Ø 32 mm	
Spindle		
Spindle sleeve stroke	115 mm	
Spindle seat	BT 40	
Spindle sleeve diameter	Ø 80 mm	
Throat	260 mm	
Drilling/milling head		
Spindle speeds	225 - 3 260 rpm	50 - 3 260 rpm
Speeds	2 x 6 speeds	6 speeds Electronically cont-rolled
Pivot range	± 30°	
Cross table		
Length x width	850 x 240 mm	
T-slot size size/amount/distance	18 mm / 3 / 80 mm	
Cross table load bearing capacity	max. 175 kg	
Clearance spindle to table max.	545 mm	
Travel		
X axis manual	520 mm	
Y axis manual	260 mm	
Z axis	manual 465 mm / automatic ~385 mm	
Dimensions and weight		
Length x width x height max.	1 210 x 1 020 x 1 645 mm	
Net weight	518 kg	

Dimensions

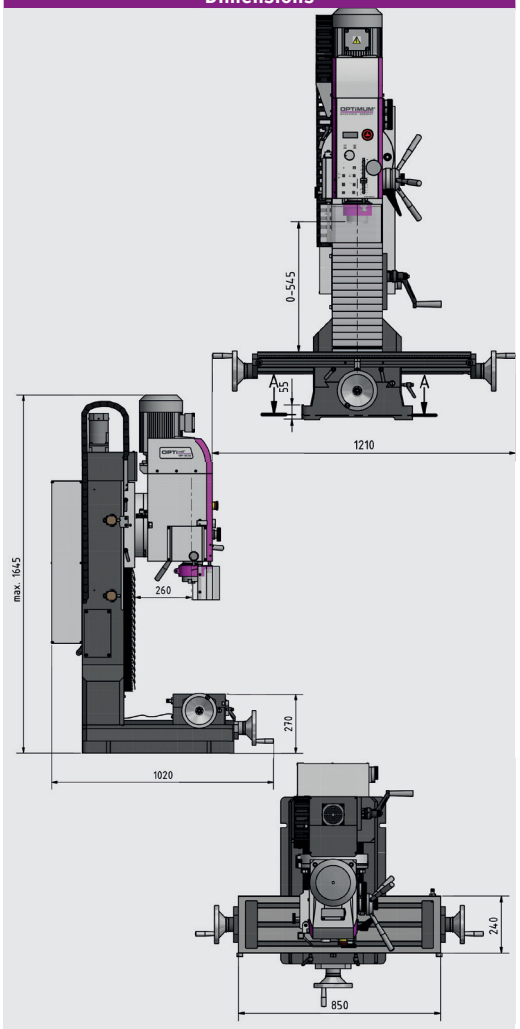

Scope of delivery

› Operating tool

Accessories	Article no.
Starter set BT 40	3353284
› Milling head holder Ø 27 mm	
› Quick clamping drill chuck 1 - 13 mm	
› 2 units Weldon Ø 6 mm and 20 mm	
› 1 unit each Weldon Ø 8 / 10 / 12 / 16mm	
› Adapter sleeve BT 40 / MT 3	
› 4 units spring collet holder ER 32	
› Spring collet key ER 32	
› 18-part Collet kit ER 32	
› Height-adjuster	
› Assembly and tool adjustment gauge	
› 14x pull studs	
› Taper squeegee	

Machine vises	Article no.
FMS 125	3354125
FMSN 125	3354120
VMQ 100	3354181
MV3-75	3354175
DAS 100	3355500
ZAS 50	3354170
› Informationen from page 139	

Accessories	Article no.
Milling head holder Ø 27 mm	3353336
Quick clamping drill chuck 1 - 13 mm	3536303
Weldon holder Ø 6 mm	3353340
Weldon holder Ø 8 mm	3353341
Weldon holder Ø 10 mm	3353342
Weldon holder Ø 12 mm	3353343
Weldon holder Ø 16 mm	3353344
Weldon holder Ø 20 mm	3353345
BT 40 - MT 3 **adapter**	3353335
Spring collet holder ER 32	3353334
Spring collet holder spanner ER 32	3353307
Collet kit ER 32	3441122
Height-adjuster	3536290
Assembly and tool adjustment gauge	3536193
Taper squeegee	3353331
Pull stud 40 x 45° M16	3353332
Universal table feed V 99S (information page 151)	3352021
Assembly kit V 99S - X axis	3352036
Assortment of clamping tools size 16, 58-part size	3352019
Steel chassis MSM 4 (information page 153)	3353015
Vibration damping machine base SE 55 (4 units required)	3352981
› More accessories for milling machines from page 139	

Note: The milling machines (frequency inverters) comply with standard DIN EN 55011: class C2.
Important information on operation of machines with frequency converters on page 323.

UNIVERSAL MILLING MACHINES



Visit our exhibition in Hallstadt/Bamberg

MILLING MACHINES

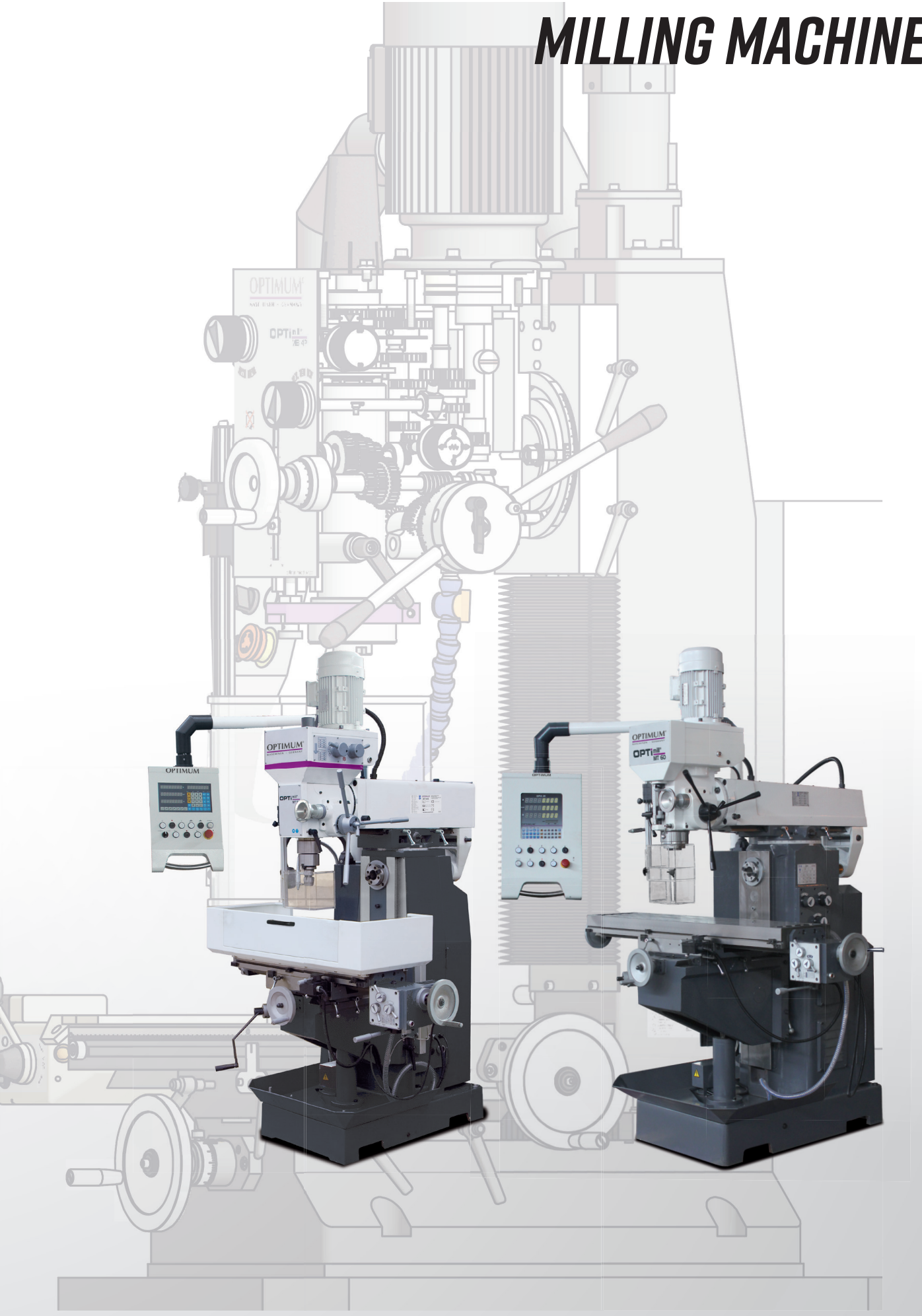

TRADES

Universal drilling/milling machine with digital position display DRO 5 and cast machine chassis. **MB 4PV with continuously variable electronically controlled drive**

Facts that impress in terms of quality, performance and price

- Heavy, solid cast design
- Smooth action due to polished gearwheels running in an oil sump
- Solid and generously dimensioned cross table with precision surface finish and T-slots
- Gear head pivots through ± 45°
- Adjustable cleats
- Drilling depth stop
- Right-handed/left-handed rotation
- Drilling/Thread tapping function
- Automatic spindle sleeve feed with manual fine feed
- Motorised positioning of the Z axis
- Coolant system
- Solid column with hand-honed dovetail guide for maximum stability and best possible precision
- Feed spindle play adjustable and re-adjustable
- Height-adjustable, large protective screen with micro switch
- Machine lamp
- Solid cast machine chassis with chip channel

MB 4P:

- Two-stage industrial quality electric motor
- Large speed range from 95 - 3 200 rpm thanks to 12 switchable speeds

MB 4PV:

- Single-speed, premium, industrial electric motor
- Large speed range from 60 - 2 760 rpm thanks to 2 continuously variable speeds
- SINAMICS V20 inverter by SIEMENS

Automatic spindle sleeve feed



› The spindle sleeve moves downwards at the set feed speed and switches off again at the set drilling depth on the scale ring. The spindle sleeve then moves back to its starting position.

Digital position display DRO 5



› Four-line LCD display
› User-friendly menu navigation

SIEMENS inverter



SINAMICS V20

› Energy-saving features
› Advanced cooling
› Painted electronics assemblies

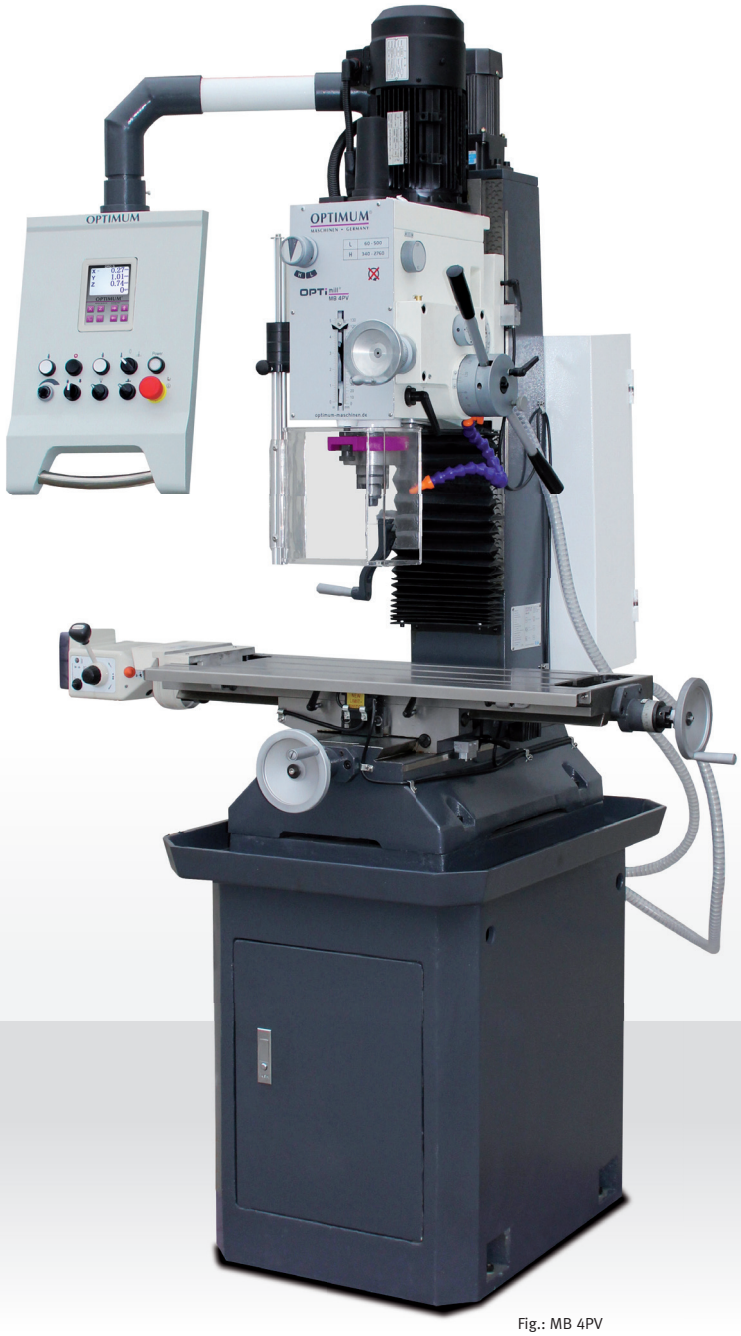

Fig.: MB 4PV

*OPTImill® is a registered brand of Optimum Maschinen Germany GmbH and exclusively used for milling machines

Technical specifications, accessories and dimensions

DPA VARIO

Model	MB 4P	MB 4PV**
Article no.	3338460	3338466
Output		
Electrical connection	400 V / 3 Ph ~50 Hz	400 V / 3 Ph ~50 Hz
Motor Power	1.1 / 1.5 kW	1.5 kW
Coolant pump motor	100 W	
Drilling/milling output		
Drilling performance in steel (S235JR)	Ø 32 mm	Ø 24 mm
Continuous drilling performance steel (S235JR)	Ø 28 mm	Ø 20 mm
Max. sensor head size	Ø 63 mm	Ø 63 mm
Max. shaft milling cutter size	Ø 28 mm	Ø 26 mm
Spindle		
Spindle sleeve stroke	120 mm	
Spindle sleeve diameter	75 mm	
Spindle seat	MT 4	
Throat	258 mm	
Drawbar	M16	
Drilling/milling head		
Spindle speeds	95 - 3 200 rpm	60 - 2 760 rpm
Speeds	2 x 6 speeds	2 speeds, electronically controlled
Pivot range	± 45°	
Cross table		
Clearance spindle to table max.	420 mm	
Length x width	800 x 240 mm	
T-slot size / distance / amount	14 mm / 80 mm / 3	
Automatic spindle sleeve feed	0.1 / 0.18 / 0.26 mm/rev	
Travel		
X axis	manual 560 mm / automatic ~480 mm	
Y axis manual	195 mm	
Z axis manual	350 mm	
Dimensions and weight		
Length x width x height	1 600 x 930 x 2 110 mm	
Net weight	495 kg	

Dimensions

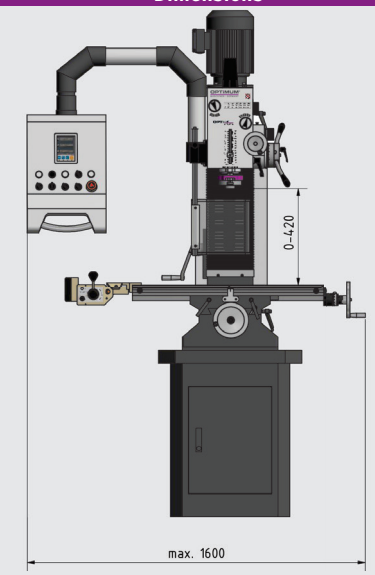

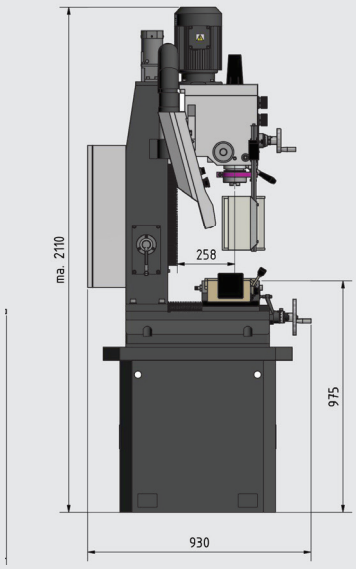

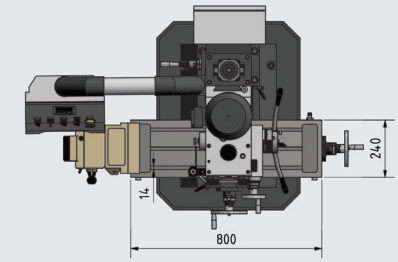

Accessories	Article no.
Parallel shim set, 20-part	3354001
Horizontal-vertical rotary indexing table RT 150	3356150
Horizontal-vertical rotary indexing table RTE 165	3356365
Assortment of clamping tools size 12, 58-part size	3352017
End mill set HSS TiN-coated 12-part	3352250
End mill set HSS TiN-coated 20-part	3352255
Copying and facing blade MT 4	3350214
Vibration damping machine base SE 55 (4 units required)	3352981
Bore head set MT 4	3352125
Arbour for drill chuck MT 4	3350304
Collet chuck MT 4/M16	3352094
Thread tapping chuck M3 - M12	3050705
Thread tapping chuck M8 - M20	3050706

› More accessories for milling machines from page 139
› Extension/accessories for coolant system page 320

Scope of delivery

- Machine mobile base
- Morse taper MT 3/B16
- Reduction sleeve MT 4 - MT 3
- Drawbar M16
- Operating tool

Note: The milling machines (frequency inverters) comply with standard DIN EN 55011: class C2.
Important information on operation of machines with frequency converters on page 323.

TRADES

Universal drilling/milling machine
with table feed on X- and Y-axis

Facts that impress in terms of quality, performance and price

- Vibration absorbing cast design
- Gears in oil bath with polished, hardened gear wheels
- Coolant system
- LED lamp
- Solid and generously dimensioned cross table with precision surface finish with T-slots and adjustable cleats
- Adjustable guide rails
- Adjustable limit switch cut-off on the X axis
- Mechanical spindle sleeve feed for drilling via spindle sleeve lever
- Right-handed/left-handed rotation
- Coupling for switching from manual coarse feed to manual fine feed
- Operation-friendly control panel
- Height-adjustable protective screen with microswitch for best possible user protection against chips and parts being flung out

Feed



› Table feed on X- and Y-axis with speed adjustment

Cross table



› The cross table (X-axis) can be rotated through ± 45°

Milling head



› Large Y axis spindle head holder throat of 250 - 650 mm
› Pivot range of spindle head ± 45°

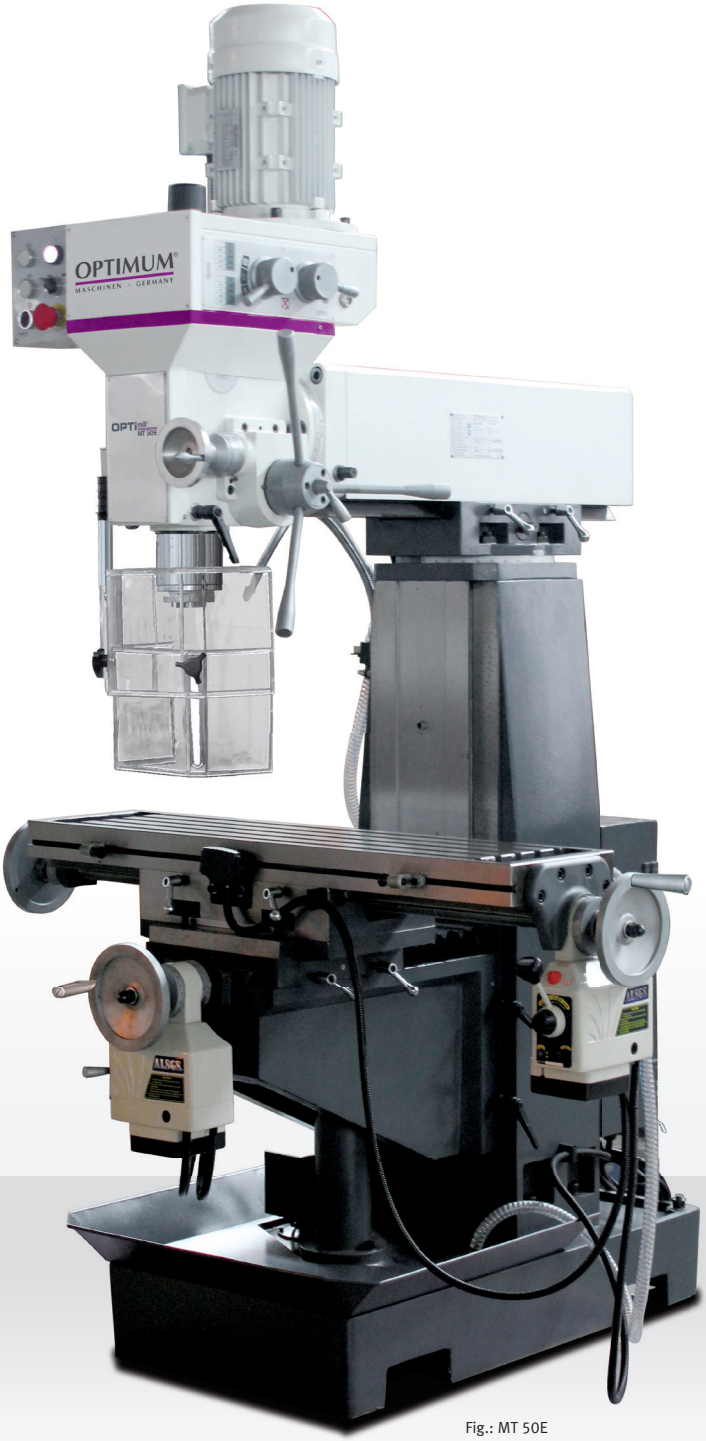

Fig.: MT 50E

*OPTImill® is a registered brand of Optimum Maschinen Germany GmbH and exclusively used for milling machines

Technical specifications, accessories and dimensions

Model	MT 50E
Article no.	3336010
Output	
Electrical connection	400 V / 3 Ph ~50 Hz
Drive motor	0.85 / 1.5 kW
Coolant pump motor	40 W
Drilling/milling output	
Drilling performance in steel (S235JR)	Ø 30 mm
Continuous drilling performance steel (S235JR)	Ø 25 mm
Max. sensor head size	Ø 63 mm
Max. shaft milling cutter size	Ø 25 mm
Spindle	
Spindle sleeve stroke	120 mm
Spindle seat	ISO 40 DIN 2080
Distance spindle to cross table	60 - 360 mm
Throat	250 - 650 mm
Drawbar	M16
Drilling/milling head	
Spindle speeds	115 - 1 750 rpm
Gears / motor speeds	4-speed / 2-speed
Milling head pivot range	± 45°
Cross table	
Length x width	1 000 x 240 mm
Cross table max. load bearing capacity	150 kg
T-slot size / quantity	14 mm / 4
Swivel range	± 45°
Travel	
X axis	manual 580 mm automatic ~500 mm
Y axis	manual 230 mm automatic ~150 mm
Z axis manual	320 mm
Dimensions and weight	
Length x width x height	1 360 x 1 150 x 2 080 mm
Net weight	760 kg

Dimensions

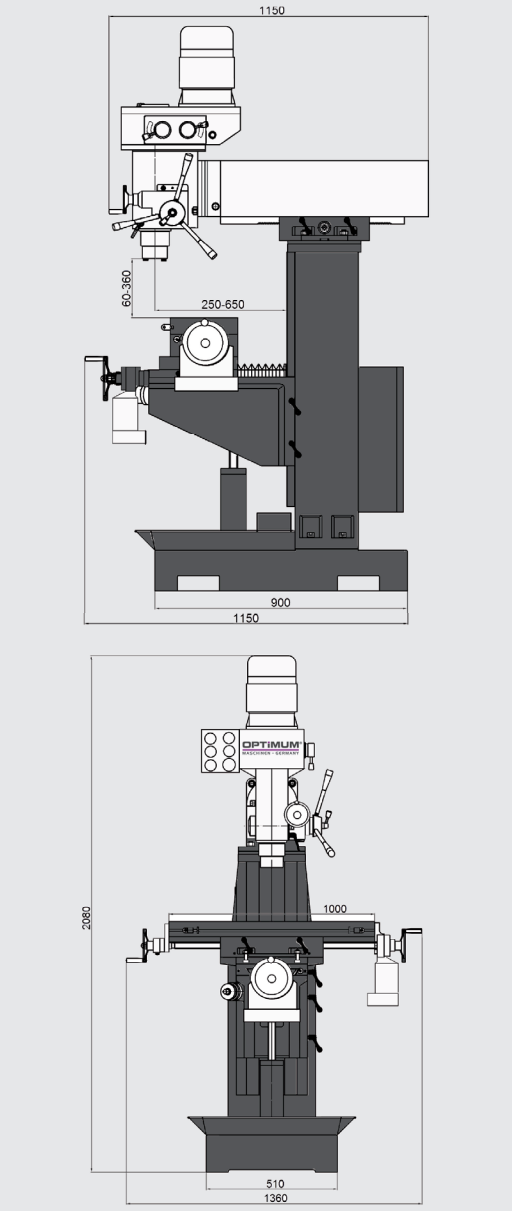

Accessories	Article no.
Parallel shim set, 20-part	3354001
Horizontal-vertical rotary indexing table RT 150	3356150
Horizontal-vertical rotary indexing table RT 200	3356200
Horizontal-vertical rotary indexing table RTE 165	3356365
Horizontal-vertical rotary indexing table RTU 165	3354165
Assortment of clamping tools size 12, 58 parts	3352017
End mill set HSS TiN-coated **12-part**	3352250
End mill set HSS TiN-coated **20-part**	3352255
Workpiece support WPS-4	3354264
Precision machine shoe SEU1 (4 units required)	3352985
Drill chuck holder (arbour) ISO 40/ M16 / B16	3352070
Collet chuck set 18-part ISO 40	3352056
Copying and facing blade head ISO 40 DIN 2080	3350216
Precision bore head set ISO 40	3352128
Hold-down unit set of 2	3352031

› More accessories for milling machines from page 139
› Extension/accessories for coolant system page 320

Scope of delivery

- › Key type drill chuck 3 - 16 mm / B18
- › Arbor for drill chuck ISO 40 / B18
- › T-slot nuts
- › Push-out tool
- › Adapter sleeve ISO 40 / MT 3
- › Reduction sleeve MT 3 - MT 2
- › Operating tool

Machine vises	Article no.
FMS 125	3354125
FMSN 125	3354120
VMQ 100	3354181
MV3-75	3354175
DAS 100	3355500
ZAS 50	3354170

› Informationen from page 139

TRADES

Universal precision drilling/milling machine for horizontal and vertical milling work. With digital 3-axis position display DPA 2000

Facts that impress in terms of quality, performance and price

- Heavy, solid design using premium vibration-absorbing grey cast material
- Gears in oil bath with polished, hardened gear wheels
- Coolant system
- Halogen machine lamp with tight beam
- Solid and generously dimensioned cross table with precision surface finish with T-slots and adjustable cleats
- Cross table can be swivelled through ± 45° on both sides
- Tilting drilling/milling head ± 45°
- Right-handed/left-handed rotation
- X axis can be moved optionally wit the hand wheel or the table feed unit
- Automatic end position cut-off on X axis
- Height-adjustable protective screen with microswitch for best possible user protection against chips and parts being flung out

Horizontal milling position



› With arrester and collet for disc milling cutter
› Rotate through ± 180° for horizontal milling

OPTI Control panel



› Integrated switch panel
› Integrated **digital position display DPA 2000**
› Pivots to left and right side of machine

Cross table housing



› Fold-up type
› Removable

Cross table



› can be swivelled through ± 45° on both sides



Fig.: MT 50

*OPTImill® is a registered brand of Optimum Maschinen Germany GmbH and exclusively used for milling machines

DPA

Technical specifications, accessories and dimensions

Model	MT 50
Article no.	3336005
Output	
Electrical connection	400 V / 3 Ph ~50 Hz
Total rated value	4.5 kW
Vertical drive motor	1.1 / 2.2 kW
Horizontal drive motor	1.5 kW
Coolant pump motor	40 W
Drilling/milling output	
Drilling performance in steel (S235JR)	Ø 30 mm
Continuous drilling performance steel (S235JR)	Ø 25 mm
Max. sensor head size	Ø 100 mm
Max. shaft milling cutter size	Ø 25 mm
Spindle	
Spindle sleeve stroke	120 mm
Spindle seat	ISO 40 DIN 2080
Distance spindle to cross table	60 - 390 mm
Vertical	
Spindle speeds	115 - 1 750 rpm
Speeds	8 speeds
Swivel range milling head	± 45°
Throat	240 - 650 mm
Horizontal	
Spindle speeds	60 - 1 350 rpm
Speeds	9 speeds
Throat	0 - 185 mm
Cross table	
Length x width	1 000 x 240 mm
Cross table max. load bearing capacity	160 kg
T-slot size / quantity	14 mm / 4
Rotating cross table	± 45°
Travel	
X axis	manual 580 mm / automatic ~500 mm
Table feed X axis (8 speeds)	24 - 720 mm/min.
Y axis manual	200 mm
Z axis manual	340 mm
Dimensions and weight	
Length x width x height	1 290 x 1 090 x 2 170 mm
Net weight	820 kg

Dimensions

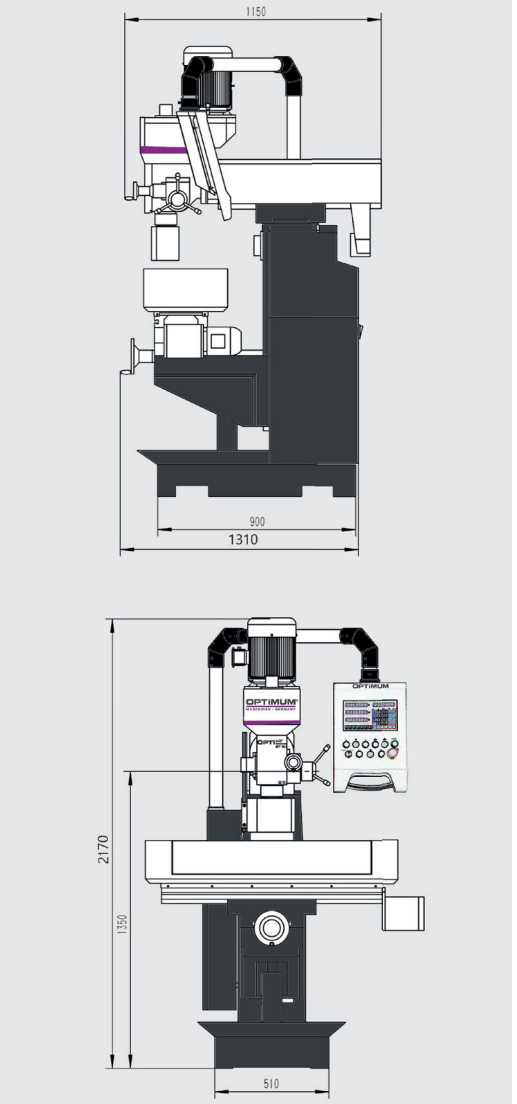

Scope of delivery

- Key type drill chuck 1 - 16 mm / B18
- Arbor for drill chuck ISO 40 / B18
- Cutter spindle horizontal milling Ø 22 /Ø 27 mm
- Adapter sleeve ISO 40 / MT 3
- Adapter sleeve ISO 40 / MT 2
- Tie rod vertical and horizontal
- T-slot nuts
- Push-out tool
- Operating tool

Accessories	Article no.
Milling table feed V250 for the Y-axis	3352030
Factory assembly V250	9000489
Horizontal-vertical rotary indexing table RT 150	3356150
Horizontal-vertical rotary indexing table RT 200	3356200
Horizontal-vertical rotary indexing table RTE 165	3356365
Horizontal-vertical rotary indexing table RTU 165	3354165
Assortment of clamping tools size 12, 58 parts	3352017
End mill set HSS TiN-coated **12-part**	3352250
End mill set HSS TiN-coated **20-part**	3352255
Workpiece support WPS-4	3354264
Precision machine shoe SEU1 (4 units required)	3352985
Collet chuck set 18-part ISO 40	3352056
Copying and facing blade head ISO 40 DIN 2080	3350216
Precision bore head set ISO 40	3352128

› More accessories for milling machines from page 139
› Extension/accessories for coolant system page 320

Machine vises	Article no.
FMS 125	3354125
FMSN 125	3354120
VMQ 100	3354181
MV3-75	3354175
MV3-125	3354178
DAS 100	3355500
ZAS 50	3354170

› Informationen from page 139

Universal milling machine for horizontal and vertical milling work.
With digital 3-axis position display DPA 21

Facts that impress in terms of quality, performance and price

- Heavy, solid design using premium vibration-absorbing grey cast material
- Coolant system
- Solid and generously dimensioned cross table with precision surface finish with T-slots and adjustable cleats
- Right-handed/left-handed rotation
- Switch on automatic spindle sleeve feed (drilling) via the spindle sleeve feed lever or manual feed of the spindle sleeve with the fine feed handwheel
- X axis can be moved optionally wit the hand wheel or the table feed unit
- Height-adjustable protective screen with microswitch for best possible user protection against chips and parts being flung out

Horizontal milling position



› With arrester and collet for disc milling cutter
› Rotate through ± 180° for horizontal milling

Milling head



› Spindle head carrier moves to front and rear
› Reach of Y-axis spindle head carrier 200 - 550 mm
› Pivot range of spindle head ± 45°

Digital position display DPA 21



› User-friendly membrane keyboard, splash water protected, sealed and dazzle free
› Greater operation accuracy
› Reduction of error quota
› Clear-cut keyboard layout

OPTI Operating panel

› Integrated switch panel
› Integrated digital position display
› Pivots and swivels



Fig.: MT 60

*OPTImill® is a registered brand of Optimum Maschinen Germany GmbH and exclusively used for milling machines



Technical specifications, accessories and dimensions

Model	MT 60
Article no.	3336090
Output	
Electrical connection	400 V / 3 Ph ~50 Hz
Total rated value	5 kW
Horizontal and vertical drive motor	2.2 kW
Coolant pump motor	40 W
Drilling/milling output	
Drilling performance in steel (S235JR)	Ø 30 mm
Continuous drilling performance steel (S235JR)	Ø 25 mm
Max. sensor head size	Ø 100 mm
Max. shaft milling cutter size	Ø 25 mm
Spindle	
Spindle sleeve stroke	120 mm
Spindle sleeve diameter	Ø 90 mm
Spindle seat	ISO 40 DIN 2080
Clearance spindle to table	60 - 420 mm
Drawbar	M16
Vertical	
Spindle speeds	90 - 2 000 rpm
Speeds	8 speeds
Milling head pivot range	± 45°
Throat	220 - 550 mm
Automatic spindle sleeve feed	3 speeds: 0.08 / 0.25 / 1 mm/rev
Horizontal	
Spindle speeds	40 - 1 300 rpm
Speeds	9 speeds
Throat	35 - 370 mm
Cross table	
Length x width	1 270 x 280 mm
Cross table max. load bearing capacity	150 kg
T-slot size / distance / amount	14 mm / 50 mm / 4
Travel	
X axis	manual 750 mm / automatic ~680 mm
Y axis manual	230 mm
Z axis manual	360 mm
Dimensions and weight	
Length x width x height	1 650 x 1 310 x 2 160 mm
Net weight	1 300 kg

Dimensions

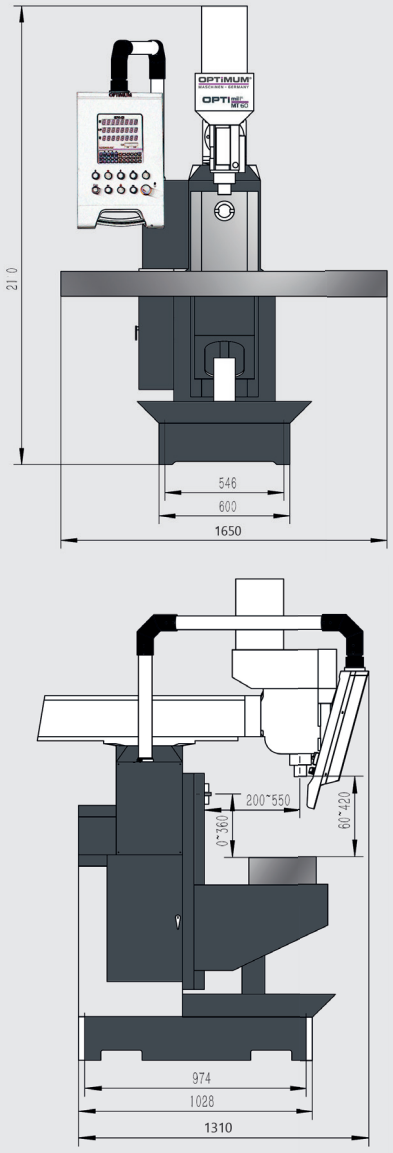

Scope of delivery

- Key type drill chuck Ø 3 - 16 mm / B18
- Tapered shank for chuck ISO 40 / B18
- Adapter sleeve ISO 40 / MT 3
- Reduction sleeve MT 3 - MT 2
- Arbour with counter-bearing ISO40 Ø 22 mm
- Arbour with counter-bearing ISO40 Ø 27 mm
- Drawbar horizontal and vertical
- Operating tool

Accessories	Article no.
Milling table feed V250 for the Y-axis	3352030
Factory assembly V 250	9000489
Horizontal-vertical rotary indexing table RT 150	3356150
Horizontal-vertical rotary indexing table RT 200	3356200
Horizontal-vertical rotary indexing table RTE 165	3356365
Horizontal-vertical rotary indexing table RTU 165	3354165
Assortment of clamping tools size 12, 58-part size	3352017
End mill set HSS TiN-coated 20-part	3352255
Precision machine shoe SEU1 (4 units required)	3352985
Drill chuck holder (arbour) ISO 40/ M16 / B16	3352070
Collet chuck set 18-part ISO 40	3352056
Copying and facing blade head ISO 40 DIN 2080	3350216
Precision bore head set ISO 40	3352128
› More accessories for milling machines from page 139 and coolant system page 320	

Machine vises	Article no.
FMS 125	3354125
FMSN 125	3354120
VMQ 100	3354181
MV3-75	3354175
MV3-125	3354178
DAS 100	3355500
ZAS 50	3354170
› Informationen from page 139	

MULTIFUNCTIONAL MILLING MACHINES



Visit our exhibition in Hallstadt/Bamberg

MILLING MACHINES

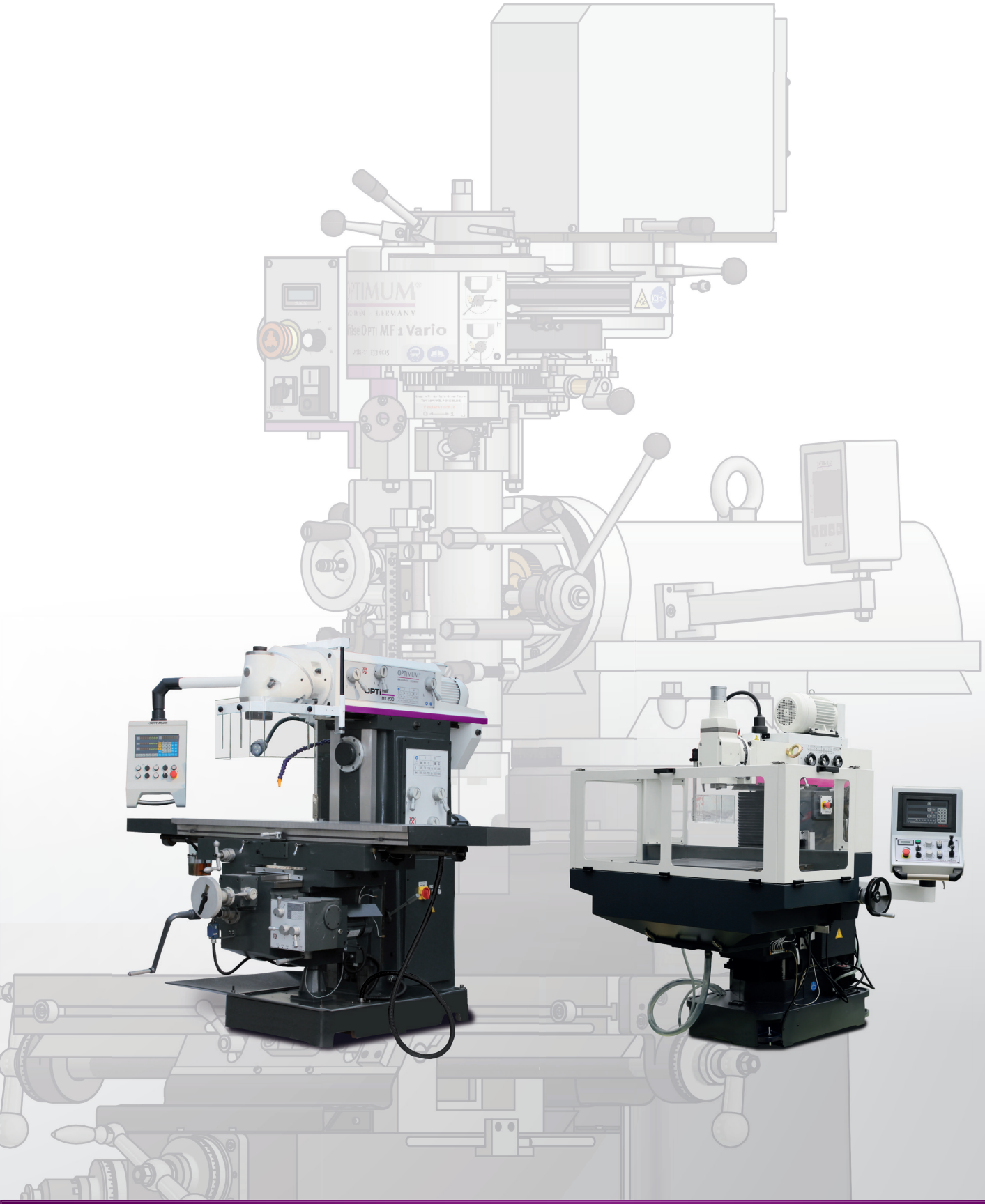

TRADES

Multifunctional drilling/milling machines with mechanised continuously controllable drive. With digital 3-axis position display DPA 2000

Facts that impress in terms of quality, performance and price

- Solid design using premium cast meehanite
- Excellent concentricity thanks to tapered roller bearings, better than 0.01 mm measured in the spindle sleeve
- X and Y axis with adjustable 55 ° dovetail guide
- Y-axis with adjustable flat guide
- Coolant system
- Digital position display DPA 2000
- Solid and generously dimensioned cross table with precision surface finish and adjustable stops
- Tilting drilling/milling head ± 45°
- Automatic spindle sleeve feed, 3 stages, 0.04 - 0.15 mm/rev
- Precision micro feed
- Adjustable drilling depth stop with millimetre scale, can be read off on front
- Right-handed/left-handed rotation
- Continuously variable speed control
- Milling spindle with precision bearing
- Mechanical spindle brake
- Central lubrication
- Height-adjustable protective screen with microswitch for best possible user protection against chips and parts being flung out

MF 4-B:

- Cross table load bearing capacity 300 kg
- Long travel: X / Y / Z axis
  740 mm / 330 mm / 320 mm

Feed



› Motorised feed on X, Y and Z axes

Milling head

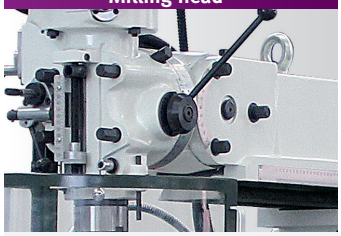

› The spindle head can be swivelled forwards or backwards through 45° and swivelled through 90° to the right or left

Central lubrication



› Reduces maintenance overhead
› Reduces wear
› Improves effectiveness and machine service life

Operating panel

› Integrated switch panel
› Integrated **digital position display DPA 2000** with speed display
› Pivots and swivels



Fig.: MF 4-B

*OPTImill® is a registered brand of Optimum Maschinen Germany GmbH and exclusively used for milling machines

Technical specifications, accessories and dimensions

DPA

Model	MF 2-B		MF 4-B	
Article no.	3348330		3348340	
Output				
Electrical connection	400 V / 3 Ph ~50 Hz			
Total rated value	3 kW			
Drive motor	2.2 kW			
Coolant pump motor	90 W			
Drilling/milling output				
Drilling performance in steel (S235JR)	Ø 24 mm			
Continuous drilling performance steel (S235JR)	Ø 20 mm			
Max. sensor head size	Ø 76 mm			
Max. shaft milling cutter size	Ø 25 mm			
Spindle				
Spindle sleeve stroke	127 mm			
Spindle sleeve diameter	86 mm			
Spindle seat	ISO 40 DIN 2080			
Distance spindle to cross table	405 mm			
Throat	15 - 415 mm		0 - 420 mm	
Drilling/milling head				
Spindle speeds	60 - 4 200 rpm			
Speeds	2 speed, mechanically continuously controllable			
Milling cutter head travel	312 mm		470 mm	
Horizontal swivel range	± 90°			
Vertical pivot range	± 45°			
Automatic spindle sleeve feed	3 speeds: 0.038 / 0.076 / 0.152 mm/rev			
Cross table				
Length x width	1,246 x 230 mm		1 370 x 254 mm	
Cross table max. load bearing capacity	200 kg		300 kg	
T-slot size / distance / amount	16 mm / 63 mm / 3			
Travel	manual	autom.	manual	autom.
X axis (Cross table)	690 mm	~610 mm	820 mm	~740 mm
Y axis (Cross table)	310 mm	~230 mm	410 mm	~330 mm
Z-axis (Cross table mount)	390 mm	~310 mm	400 mm	~320 mm
Dimensions and weight				
Length x width x height	2 000 x 1 600 x 2 010 mm		2 400 x 2 160 x 2 300 mm	
Net weight	1 000 kg		1 260 kg	

Dimensions

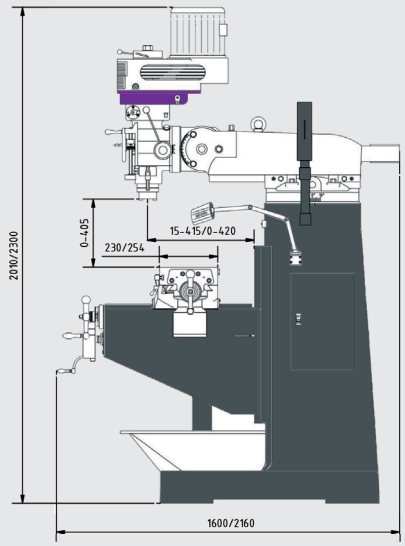

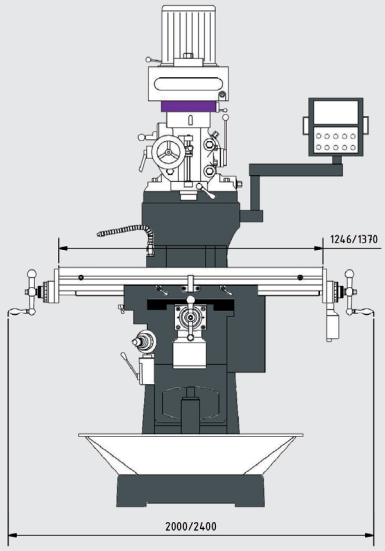

Accessories	Article no.
Parallel shim set, 20-part	3354001
Horizontal-vertical rotary indexing table RT 150	3356150
Horizontal-vertical rotary indexing table RT 200	3356200
Horizontal-vertical rotary indexing table RTE 165	3356365
Horizontal-vertical rotary indexing table RTU 165	3354165
Assortment of clamping tools size 14, 58-part size	3352018
End mill set HSS TiN-coated **12-part**	3352250
End mill set HSS TiN-coated **20-part**	3352255
Precision machine shoe SEU1 (4 units required)	3352985
Precision quick release chucks 1 - 10 mm; B16	3050610
Drill chuck holder (arbour) ISO 40/ M16 / B16	3352070
Collet chuck set 18-part ISO 40	3352056
Copying and facing blade head ISO 40 DIN 2080	3350216
Precision bore head set ISO 40	3352128
Compressed air tool clamping system ISO 40 (s. page 150)	3352394
Factory assembly compressed air tool clamping system ISO 40 (Orders without assembly: Some adjustment work may be necessary.)	9000490

› More accessories for milling machines from page 139 and coolant system page 320

Scope of delivery

› Chip tray
› Toolbox with operating tools

Machine vises	Article no.
ZAS 50	3354170
HMS 125	3355127
FMS 125 (MF 2-B)	3354125
FMS 150 (MF 4-B)	3354150
FMSN 125 (MF 2-B)	3354120
FMSN 150 (MF 4-B)	3354130
VMQ 125 (MF 2-B)	3354182
VMQ 150 (MF 4-B)	3354183
MV3-75	3354175
MV3-125	3354178
DAS 100	3355500

› Informationen from page 139

Multifunctional drilling/milling machines for professional deployment.

Electronic continuously variable drive with frequency inverter "made in EU" and digital 3-axis position display DPA 21

Facts that impress in terms of quality, performance and price

- Heavy, solid design using premium cast meehanite
- Excellent concentricity thanks to tapered roller bearings, better than 0.01 mm measured in the spindle sleeve
- X and Z axis with adjustable dovetail guide
- Coolant system
- Digital position display DPA 21
- Solid and generously dimensioned cross table with precision surface finish and adjustable stops
- Spindle head: Pivot up/down ± 45° and swivel left/right ± 90°
- Automatic spindle sleeve feed
- Adjustable drilling depth stop with millimetre scale, can be read off on front
- Right-handed/left-handed rotation for thread tapping
- Central lubrication
- Height-adjustable protective screen with microswitch for best possible user protection against chips and parts being flung out

MF 2V:

- Y axis with adjustable dovetail guide

MF 4V:

- Y axis with flat guide
- Large Y axis stroke of 400 mm
- Motorised table height adjustment (Z axis)

SIEMENS inverter SINAMICS G110M



Compressed air tool clamping system

› optional (Article No.: 3352394)
› Short change times through single-handed operation
› Low air consumption

X axis



› Motorised table feed
› Continuously variable speed control
› Rapid motion Right-handed/left-handed rotation

Dig. Position display DPA 21



› User-friendly membrane keyboard, splash water protected, sealed and dazzle free

OPTi Operating panel

› Integrated switch panel
› Integrated digital position display
› Swivels and pivots

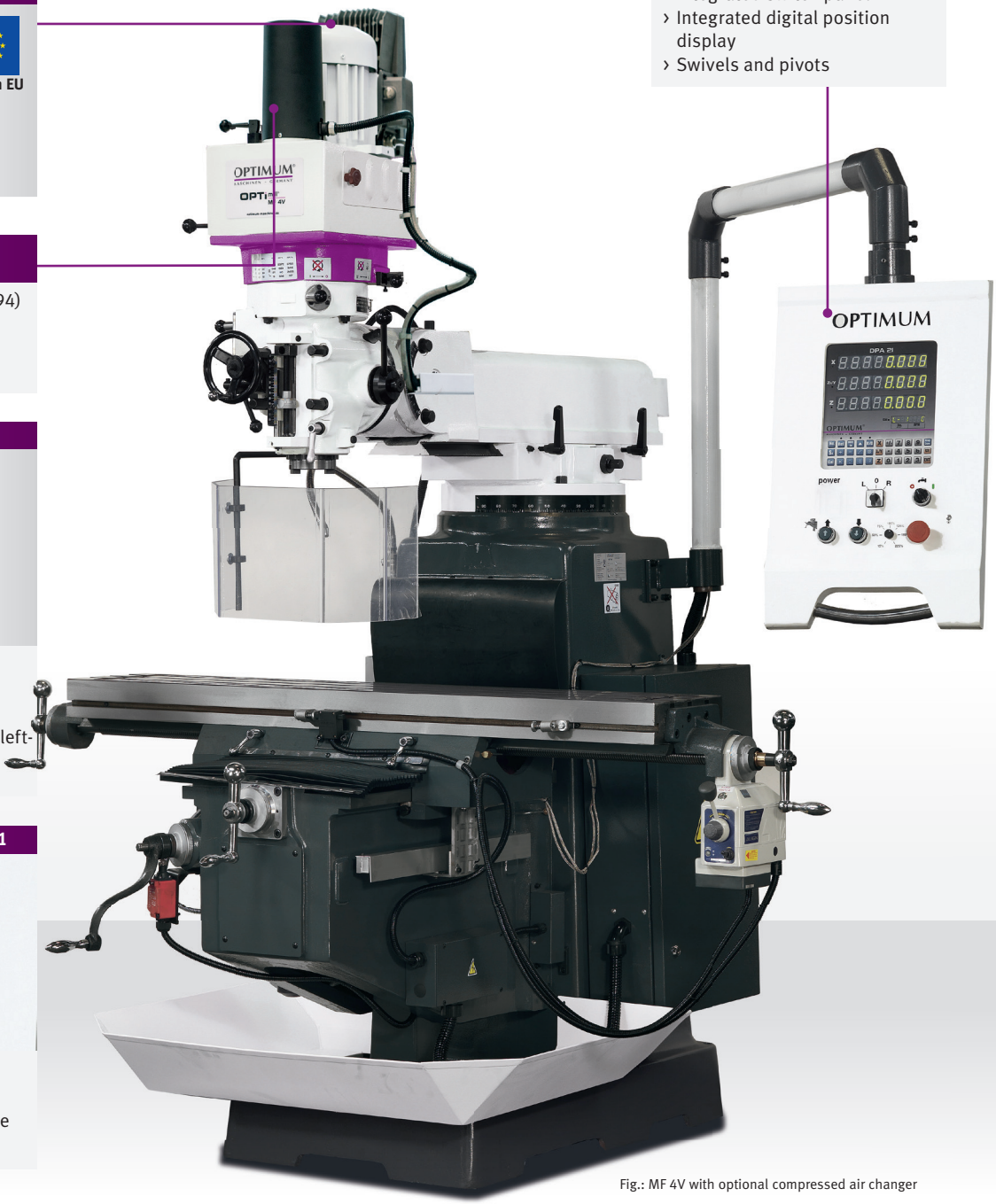

Fig.: MF 4V with optional compressed air changer

*OPTImill® is a registered brand of Optimum Maschinen Germany GmbH and exclusively used for milling machines

Technical specifications, accessories and dimensions

DPA VARIO

Model	MF 2V	MF 4V
Article no.	3336030	3336050
Output		
Electrical connection	400 V / 3 Ph ~50 Hz	
Total rated value	2.2 kW	4.5 kW
Drive motor	1.5 kW	3 kW
Coolant pump motor	100 Watts	
Drilling/milling output		
Drilling performance in steel (S235JR)	Ø 24 mm	Ø 32 mm
Continuous drilling performance steel (S235JR)	Ø 20 mm	Ø 28 mm
Max. sensor head size	Ø 76 mm	Ø 100 mm
Max. shaft milling cutter size	Ø 18 mm	Ø 20 mm
Spindle		
Spindle sleeve stroke	127 mm	
Spindle seat	ISO 40 DIN 2080	
Clearance spindle to table	57 - 463 mm	40 - 446 mm
Throat	213 - 533 mm	200 - 680 mm
Drilling/milling head		
Spindle speeds	10 - 5 100 rpm	9 - 6 750 rpm
Speeds	6 speeds, electronically controlled	8 speeds, electronically controlled
Pivot/swivel range	± 45° / ± 90°	
Automatic spindle sleeve feed	3 speeds: 0.038 / 0.076 / 0.152 mm/rev	
Cross table		
Cross table mounting surface L x W	1 245 x 230 mm	1 370 x 254 mm
Cross table max. load bearing capacity	230 kg	275 kg
T-slot size / distance / amount	16 mm / 63 mm / 3	
Travel		
X axis (Cross table)	manual 800 mm / automatic ~730 mm	manual 900 mm / automatic ~800 mm
Y axis (Cross table)	manual 305 mm	manual 320 mm
Y axis (milling head)	manual 320 mm	manual 480 mm
Z axis (Cross table)	manual 406 mm	manual 400 mm / automatic ~365 mm
Dimensions and weight		
Length x width x height	1 400 x 1 450 x 2 150 mm	1 500 x 1 450 x 2 200 mm
Net weight	950 kg	1 150 kg

Dimensions

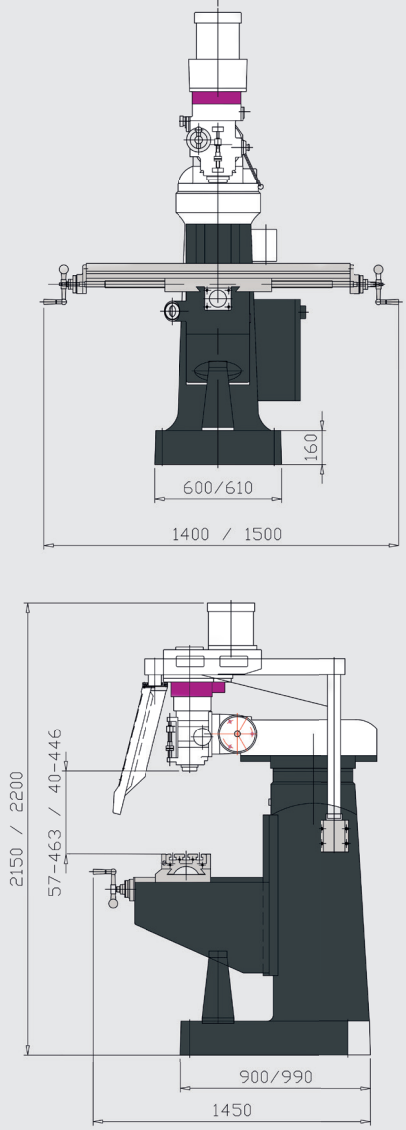

Accessories	Article no.
Parallel shim set, 20-part	3354001
Horizontal-vertical rotary indexing table RT 150	3356150
Horizontal-vertical rotary indexing table RT 200	3356200
Horizontal-vertical rotary indexing table RTE 165	3356365
Assortment of clamping tools size 14, 58-part size	3352018
End mill set HSS TiN-coated **12-part**	3352250
End mill set HSS TiN-coated **20-part**	3352255
Precision machine shoe SEU1 (4 units required)	3352985
Drill chuck holder (arbour) ISO 40/ M16 / B16	3352070
Collet chuck set 18-part ISO 40	3352056
Copying and facing blade head ISO 40 DIN 2080	3350216
Precision bore head set ISO 40	3352128
Universal table feed V250S (see page 151)	3352025
Factory assembly universal table feed V250S	9000489
Compressed air tool clamping system ISO 40 (see page 150)	3352394
Factory assembly compressed air tool clamping system ISO 40 (Orders without assembly: Some adjustment work may be necessary.)	9000490

› More accessories for milling machines from page 139

Scope of delivery

› Chip tray
› Operating tool

Machine vises	Article no.
ZAS 50	3354170
HMS 125	3355127
FMS 125 (MF 2-B)	3354125
FMS 150 (MF 4-B)	3354150
FMSN 125 (MF 2-B)	3354120
FMSN 150 (MF 4-B)	3354130
VMQ 125 (MF 2-B)	3354182
VMQ 150 (MF 4-B)	3354183
MV3-75	3354175
MV3-125	3354178
DAS 100	3355500
HCV 105	3536210
HCV 125	3536214

› Informationen from page 139

Note: The milling machines (frequency inverters) comply with standard DIN EN 55011: class C2.
Important information on operation of machines with frequency converters on page 323.

INDUSTRY

Versatile and easy retooling.
The universal milling machine for workshops

Facts that impress in terms of quality, performance and price

- Versatile range of applications
- Rugged machine construction
- Heavy, solid design using premium cast meehanite
- Smooth action due to polished gearwheels running in an oil sump
- Rugged, adjustable flat bed guide on the Y and Z axis
- Central lubrication
- Generously dimensioned, decoupled hand wheels with scales
- LED machine lamp
- Coolant system
- Digital position display DPA 2000
- Easy operation of the switching elements
- Table feed X and Z axis
- Z axis with electrical table height adjustment
- Feed motor with fixed speeds
- Solid and generously dimensioned cross table with precision surface finish with re-adjustable cleats and adjustable stops
- Vertical and horizontal milling position
- Milling head with two axes of rotation, thus pivots and rotates to any spatial angle
- Height-adjustable protective screen with microswitch for best possible user protection against chips and parts being flung out

Horizontal milling position

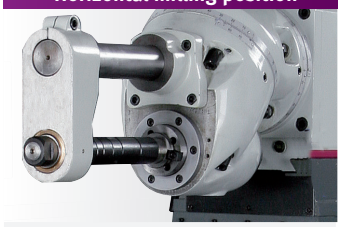

› With arrester and collet for disc milling cutter
› Adjustable plain bearing

Milling head

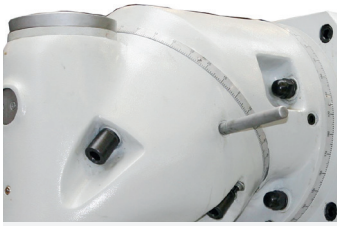

› The milling head has two rotary axes
› By turning the rear and the front part of the milling head a defined angle can be adjusted in the vertical alignment of the milling head to the feed axis of the cross table.

Digital position display DPA 2000

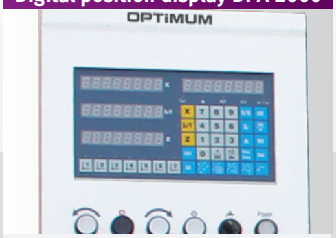

› Clear reduction of manufacturing times
› Greater operation accuracy
› Reduction of error quota
› Clear-cut keyboard layout

OPTI Operating panel

› Integrated switch panel
› Integrated digital position display
› Rotates about its own axis

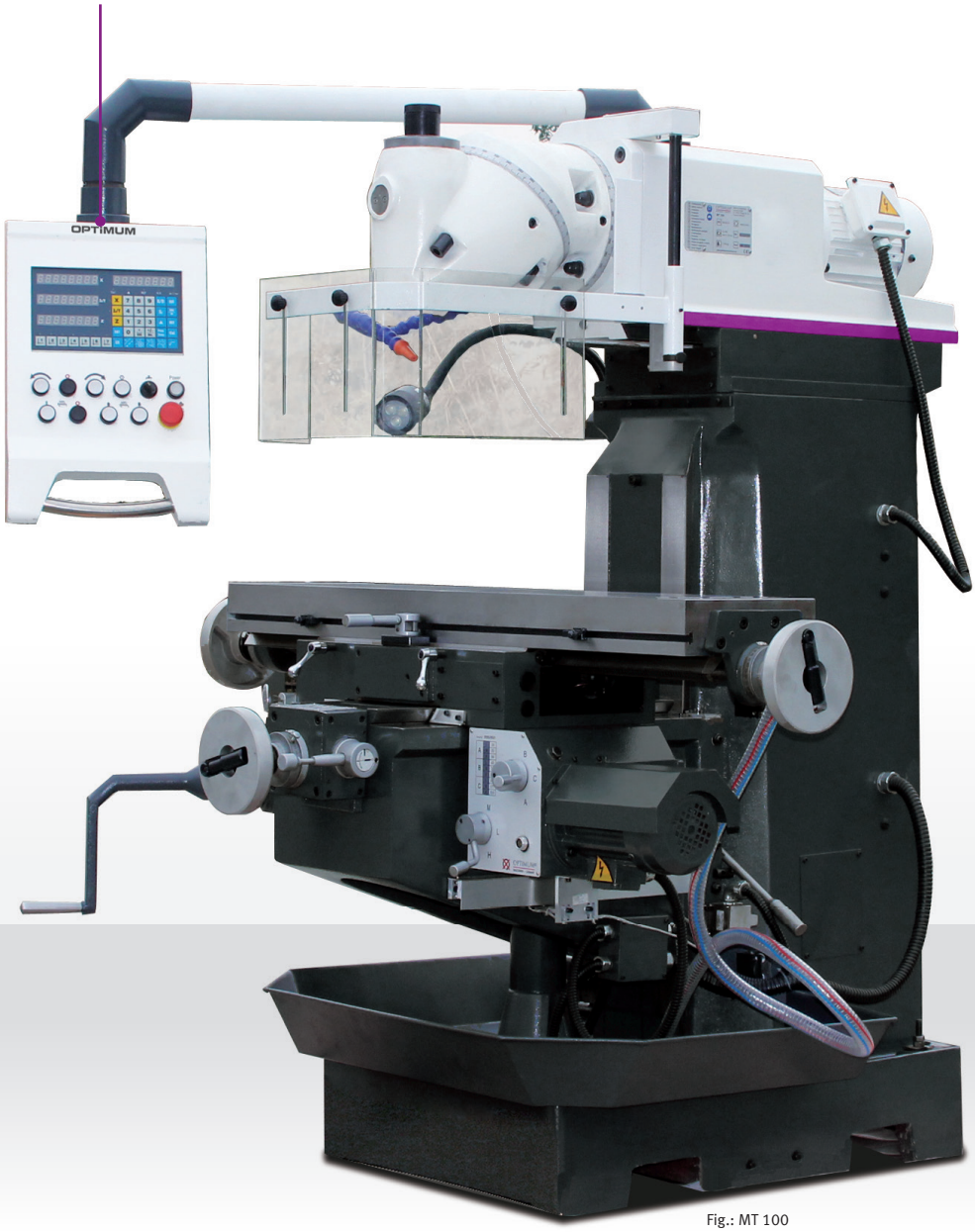

Fig.: MT 100

*OPTImill® is a registered brand of Optimum Maschinen Germany GmbH and exclusively used for milling machines

DPA

Technical specifications, accessories and dimensions

Model	MT 100
Article no.	3336110
Output	
Electrical connection	400 V / 3 Ph ~50 Hz
Total rated value	3.36 kW
Drive motor	2.2 kW
Feed motor output X-Y axis	370 Watts
Feed motor output Z-axis	750 Watts
Coolant pump motor	40 Watts
Drilling/milling output	
Max. sensor head size	Ø 85 mm
Max. shaft milling cutter size	Ø 20 mm
Spindle	
Spindle seat	ISO 40 DIN 2080
Drawbar	M16
Clearance spindle to table	90 - 520 mm
Throat	60- 500 mm
Vertical	
Spindle speeds	45 - 1 600 rpm
Speeds	11 speeds
Milling head forward tilt	90°
Rotation of milling head	360°
Cross table	
Length x width	1 120 x 260 mm
Cross table max. load bearing capacity	350 kg
T-slot size / distance / amount	14 mm / 63 mm / 3
X axis (Cross table)	
Travel	manual 600 mm / automatic ~480 mm
Table feed automatic	24 - 402 mm/min.
Y axis (Cross table)	
Travel	manual 270 mm
Z axis (Cross table)	
Travel	manual 380 mm / automatic ~340 mm
Table feed automatic	24 - 402 mm/min.
Dimensions and weight	
Length x width x height	1 540 x 1 355 x 1 650 mm
Net weight	1 300 kg

Dimensions

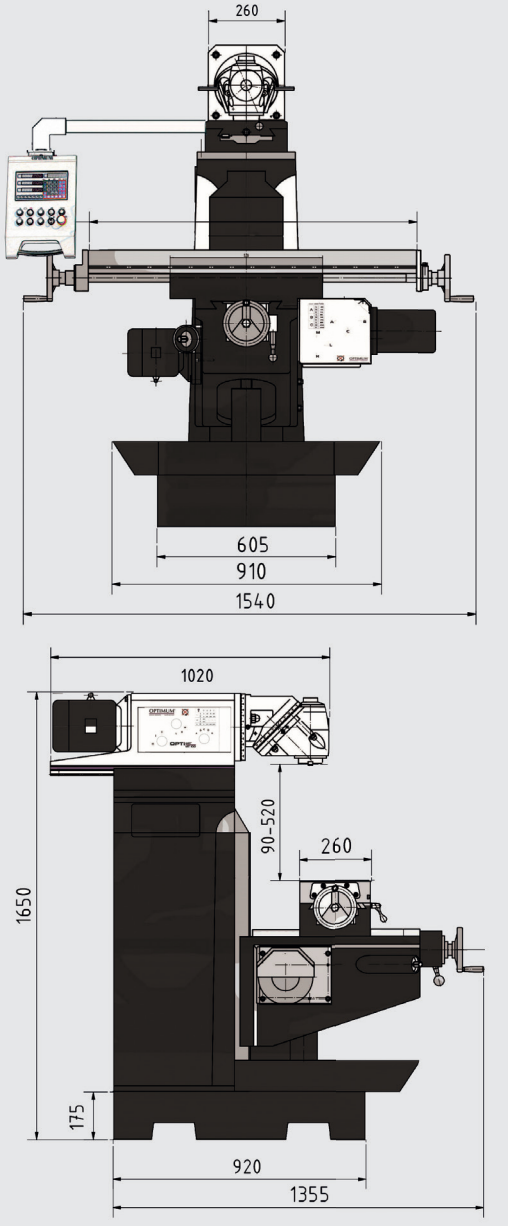

Accessories	Article no.
Parallel shim set, 20-part	3354001
Horizontal-vertical rotary indexing table RT 200	3356200
Horizontal-vertical rotary indexing table RTE 165	3356365
Horizontal-vertical rotary indexing table RTU 165	3354165
Universal dividing head TA 125	3356125
End mill set HSS TiN-coated **12-part**	3352250
End mill set HSS TiN-coated **20-part**	3352255
Assortment of clamping tools size 12, 58 parts	3352017
Precision machine shoe SEU1 (4 units required)	3352985
Precision quick release chucks 1 - 10 mm; B16	3050610
Drill chuck holder (arbour) ISO 40/ M16 / B16	3352070
Collet chuck set 18-part ISO 40	3352056
Precision bore head set ISO 40	3352128
Copying and facing blade head ISO 40 DIN 2080	3350216

› More accessories for milling machines from page 139
› Extension/accessories for coolant system page 320

Scope of delivery
› Cutter spindle horizontal milling Ø 32 mm
› Cutter arbour Ø 32 mm
› Operating tool

Machine vises	Article no.
HMS 125	3355127
FMS 150	3354150
FMSN 150	3354130
VMQ 125	3354182
MV3-75	3354175
MV3-125	3354178
DAS 100	3355500
HCV 105	3536210
HCV 125	3536214

› Informationen from page 139

Versatile and easy retooling.

The universal milling machine with servo-motorised feed.

Facts that impress in terms of quality, performance and price

- Versatile range of applications
- Rugged machine construction
- Heavy, solid design using premium cast meehanite
- Smooth action due to polished gearwheels running in an oil sump
- All guides tempered and adjustable using cleats
- Rugged flat bed guide on the Y and Z axis
- Central lubrication
- Generously dimensioned, decoupled hand wheels with scales
- LED machine lamp
- Coolant system
- Easy operation of the switching elements
- Table feed X, Y and Z axis
- Feed system controllable by servomotor in fixed steps
- Solid and generously dimensioned cross table with precision surface finish with re-adjustable cleats and adjustable stops
- Vertical and horizontal milling position
- Milling head with two axes of rotation, thus pivots and rotates to any spatial angle
- Height-adjustable protective screen with microswitch for best possible user protection against chips and parts being flung out

Horizontal milling position

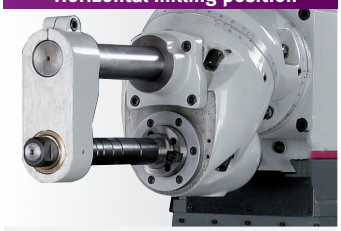

› With arrester and collet for disc milling cutter
› Adjustable plain bearing

Milling head

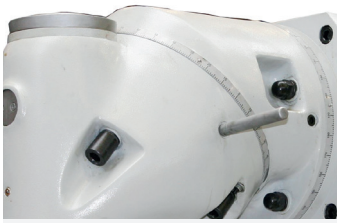

› The milling head has two rotary axes
› By turning the rear and the front part of the milling head a defined angle can be adjusted in the vertical alignment of the milling head to the feed axis of the cross table.

Digital position display DPA 21



› Clear reduction of manufacturing times
› Greater operation accuracy
› Reduction of error quota

OPTI Operating panel

› Integrated switch panel
› Integrated digital position display
› Rotates about its own axis

Follow this for the video presentation of our Optimum milling machine MT 130S

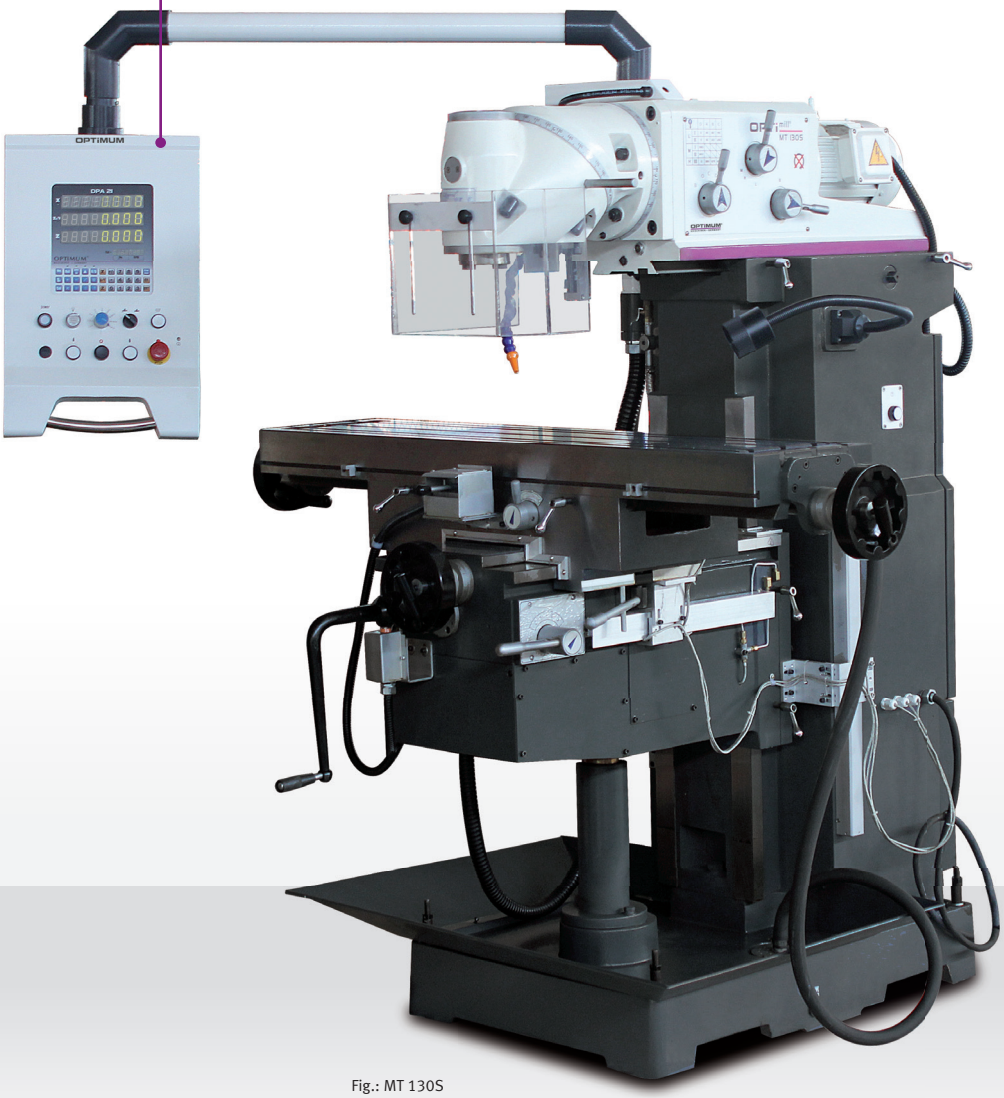

Fig.: MT 130S

*OPTImill® is a registered brand of Optimum Maschinen Germany GmbH and exclusively used for milling machines

DPA

Technical specifications, accessories and dimensions

Model	MT 130S
Article no.	3344110
Output	
Electrical connection	400 V / 3 Ph ~50 Hz
Total rated value	6 kW
Drive motor	3 kW
Feed motor output	3 kW
Coolant pump motor	60 Watt
Milling capacity	
Max. sensor head size	Ø 100 mm
Max. shaft milling cutter size	Ø 20 mm
Spindle	
Spindle seat	ISO 40 DIN 2080
Drawbar	M16
Clearance spindle to table	100 - 500 mm
Throat	150 - 550 mm
Vertical	
Spindle speeds	45 - 1 660 rpm
Speeds	11 speeds
Milling head forward tilt	90°
Rotation of milling head	360°
Cross table	
Length x width	1 270 x 300 mm
Cross table max. load bearing capacity	200 kg
T-slot size / distance / amount	14 mm / 80 mm / 3
X axis	
Travel	manual 720 mm / automatic ~650 mm
Table feed automatic	30 - 830 mm/min.
Rapid traverse	1 335 mm/min
Y axis	
Travel	manual 300 mm / automatic ~220 mm
Table feed automatic	30 - 830 mm/min.
Rapid traverse	1 335 mm/min
Z axis	
Travel	manual 400 mm / automatic ~320 mm
Table feed automatic	23 - 625 mm/min.
Rapid traverse	1 000 mm/min
Dimensions and weight	
Length x width x height	1 760 x 1 550 x 1 700 mm
Net weight	1 450 kg

Dimensions

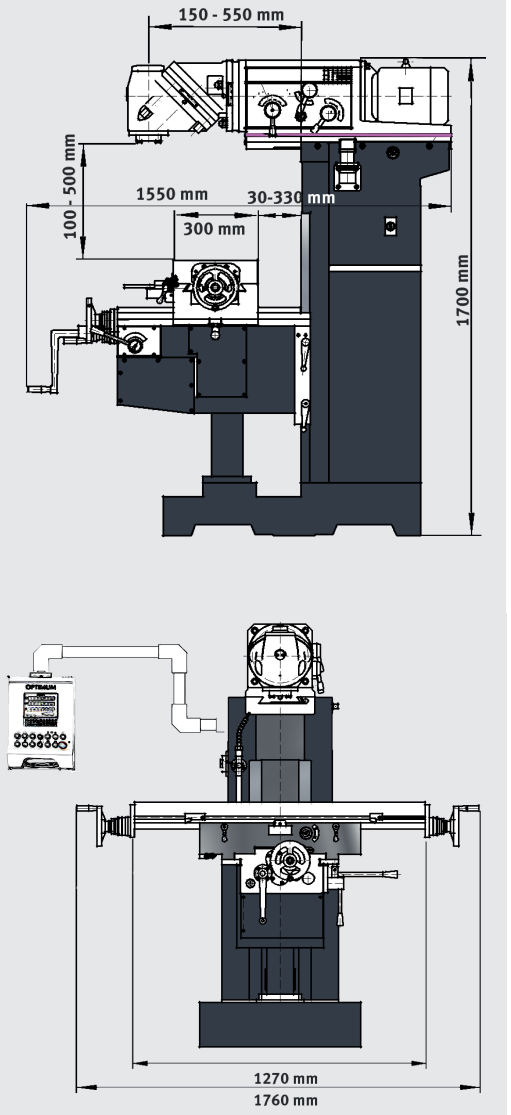

Accessories	Article no.
Parallel shim set, 20-part	3354001
Horizontal-vertical rotary indexing table RT 150	3356150
Horizontal-vertical rotary indexing table RT 200	3356200
Horizontal-vertical rotary indexing table RTE 165	3356365
Horizontal-vertical rotary indexing table RTU 165	3354165
Assortment of clamping tools size 12, 58 parts	3352017
End mill set HSS TiN-coated **12-part**	3352250
End mill set HSS TiN-coated **20-part**	3352255
Precision machine shoe SEU1 (4 units required)	3352985
Precision quick release chucks 1 - 10 mm; B16	3050610
Drill chuck holder (arbour) ISO 40/ M16 / B16	3352070
Collet chuck set 18-part ISO 40	3352056
› More accessories for milling machines from page 139	
› Extension/accessories for coolant system page 320	

Scope of delivery

- › ISO 40 tapered shank with counter-bearing for horizontal milling
- › Cutter arbour Ø 32 mm
- › Operating tool

Machine vises	Article no.
HMS 125	3355127
FMS 150	3354150
FMSN 150	3354130
VMQ 125	3354182
MV3-75	3354175
MV3-125	3354178
DAS 100	3355500
HCV 105	3536210
HCV 125	3536214
› Informationen from page 139	

Note: The milling machines (frequency inverters) comply with standard DIN EN 55011: class C2.
Important information on operation of machines with frequency converters on page 323.

INDUSTRY

Versatility and easy retooling - the universal milling machine for workshops with digital 3-axis position display

Facts that impress in terms of quality, performance and price

- Versatile range of applications
- Rugged machine construction
- Heavy, solid design using premium cast meehanite
- Smooth action due to polished gearwheels running in an oil sump
- All guides tempered and adjustable using cleats
- Rugged flat bed guide on the Y and Z axis
- Central lubrication
- Generously dimensioned, decoupled hand wheels with scales
- LED machine lamp
- Coolant system
- Easy operation of the switching elements
- Table feed X, Y and Z axis
- Solid and generously dimensioned cross table with precision surface finish with re-adjustable cleats and adjustable stops
- Vertical and horizontal milling position
- Milling head with two axes of rotation, thus pivots and rotates to any spatial angle
- Horizontal milling counterholder, attached to rear of machine for easy access
- Height-adjustable protective screen with microswitch for best possible user protection against chips and parts being flung out
- Feed motor with fixed speeds

Horizontal milling position



› With arrester and collet for disc milling cutter
› Adjustable plain bearing

Milling head



› The milling head has two rotary axes
› By turning the rear and the front part of the milling head a defined angle can be adjusted in the vertical alignment of the milling head to the feed axis of the cross table.

Digital position display DPA 2000



› Clear reduction of manufacturing times
› Greater operation accuracy
› Reduction of error quota
› Clear-cut keyboard layout

OPTI Operating panel

› Integrated switch panel
› Integrated digital position display
› Rotates about its own axis



Fig.: MT 200

*OPTImill® is a registered brand of Optimum Maschinen Germany GmbH and exclusively used for milling machines

DPA

Technical specifications, accessories and dimensions

Model	MT 200
Article no.	3336120
Output	
Electrical connection	400 V / 3 Ph ~50 Hz
Total rated value	9.2 kW
Drive motor horizontal/vertical	4 kW
Feed motor output	1.1 kW
Coolant pump motor	90 Watts
Milling capacity	
Max. sensor head size	Ø 100 mm
Max. shaft milling cutter size	Ø 20 mm
Spindle	
Horizontal and vertical Spindle seat	ISO 50 DIN 2080
Drawbar	M24
Vertical	
Clearance spindle to table	250 - 670 mm
Throat	250 - 750 mm
Spindle speeds	60 - 1 750 rpm
Speeds	12 speeds
Milling head forward tilt	90°
Rotation of milling head	360°
Horizontal	
Clearance spindle to table	0 - 400 mm
Spindle speeds	58 - 1 800 rpm
Speeds	12 speeds
Cross table	
Length x width	1 650 x 360 mm
Cross table max. load bearing capacity	450 kg
T-slot size / distance / amount	14 mm / 95 mm / 3
Rotating cross table	35°
X axis (Cross table)	
Travel	manual 1 290 mm / automatic ~1 210 mm
Table feed automatic	22 - 380 mm/min.
Table feed, stages	8 speeds
Table feed rapid motion	1 290 mm/min.
Y axis (Cross table)	
Cross table stroke	manual 280 mm / automatic ~200 mm
Table feed automatic	20 - 380 mm/min.
Table feed, stages	8 speeds
Table feed rapid motion	1 290 mm/min
Z axis (Cross table)	
Travel	manual 400 mm / automatic ~320 mm
Table feed automatic	7 - 127 mm/min.
Table feed, stages	8 speeds
Table feed rapid motion	342 mm/min.
Dimensions and weight	
Length x width x height	2 160 x 2 160 x 2 100 mm
Net weight	2 220 kg

Dimensions

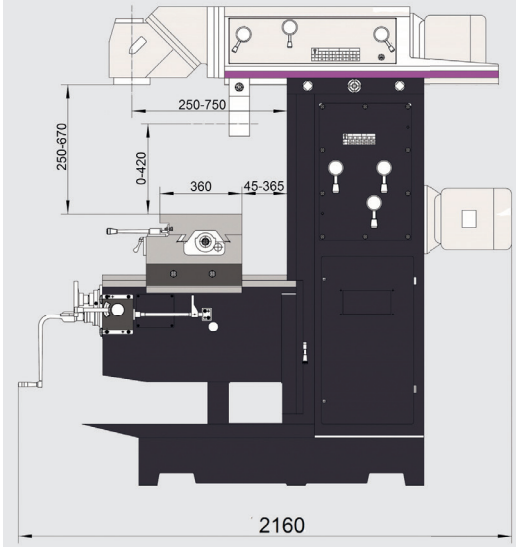

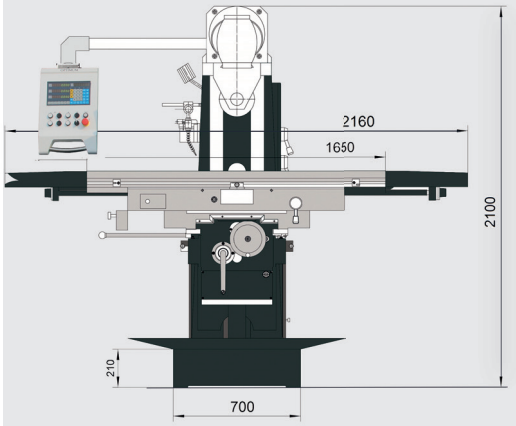

Scope of delivery

- Cutter spindle horizontal milling ISO 50 Ø 32 mm
- Cutter spindle horizontal milling ISO 50 Ø 27 mm
- Milling head holder ISO 50 Ø 32 mm
- Collet chuck ISO 50 Ø 4 - Ø 26 mm
- Operating tool

Accessories	Article no.
Parallel shim set, 20-part	3354001
Assortment of clamping tools size 12, 58-part size	3352017
Blank holder set of 2 14 mm/M12	3352031
Precision machine shoe SEU1 (4 units required)	3352985
Morse taper ISO50 B18 DIN2080	3352067
› More accessories for milling machines from page 139	

Machine vises	Article no.
HMS 125	3355127
FMS 150	3354150
FMSN 150	3354130
VMQ 125	3354182
MV3-75	3354175
MV3-125	3354178
DAS 100	3355500
HCV 105	3536210
HCV 125	3536214
› Informationen from page 139	

INDUSTRY

Versatility and easy retooling - the universal milling machine for workshops with digital 3-axis position display

Facts that impress in terms of quality, performance and price

- Versatile range of applications
- Rugged machine construction
- Heavy, solid design using premium cast meehanite
- Smooth action due to polished gearwheels running in an oil sump
- All guides tempered and adjustable using cleats
- Rugged flat bed guide on the Y and Z axis
- Central lubrication
- Generously dimensioned, decoupled hand wheels with scales
- LED machine lamp
- Decoupled hand wheels
- Coolant system
- Digital position display DPA 21
- Easy operation of the switching elements
- Table feed X, Y and Z axis
- Feed system controllable by servomotor in fixed steps
- Solid and generously dimensioned cross table with precision surface finish with re-adjustable cleats and adjustable stops
- Horizontal milling position
- Horizontal milling counterholder, attached to rear of machine for easy access
- Milling head with two axes of rotation, thus pivots and rotates to any spatial angle
- Height-adjustable protective screen with microswitch for best possible user protection against chips and parts being flung out

OPTi Operating panel

› Integrated switch panel
› Integrated digital position display
› Rotates about its own axis

Horizontal milling position

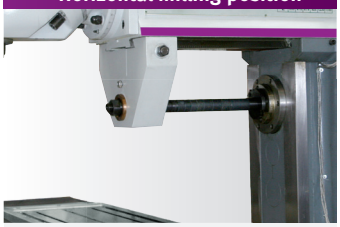

› With arrester and collet for disc milling cutter
› Adjustable plain bearing

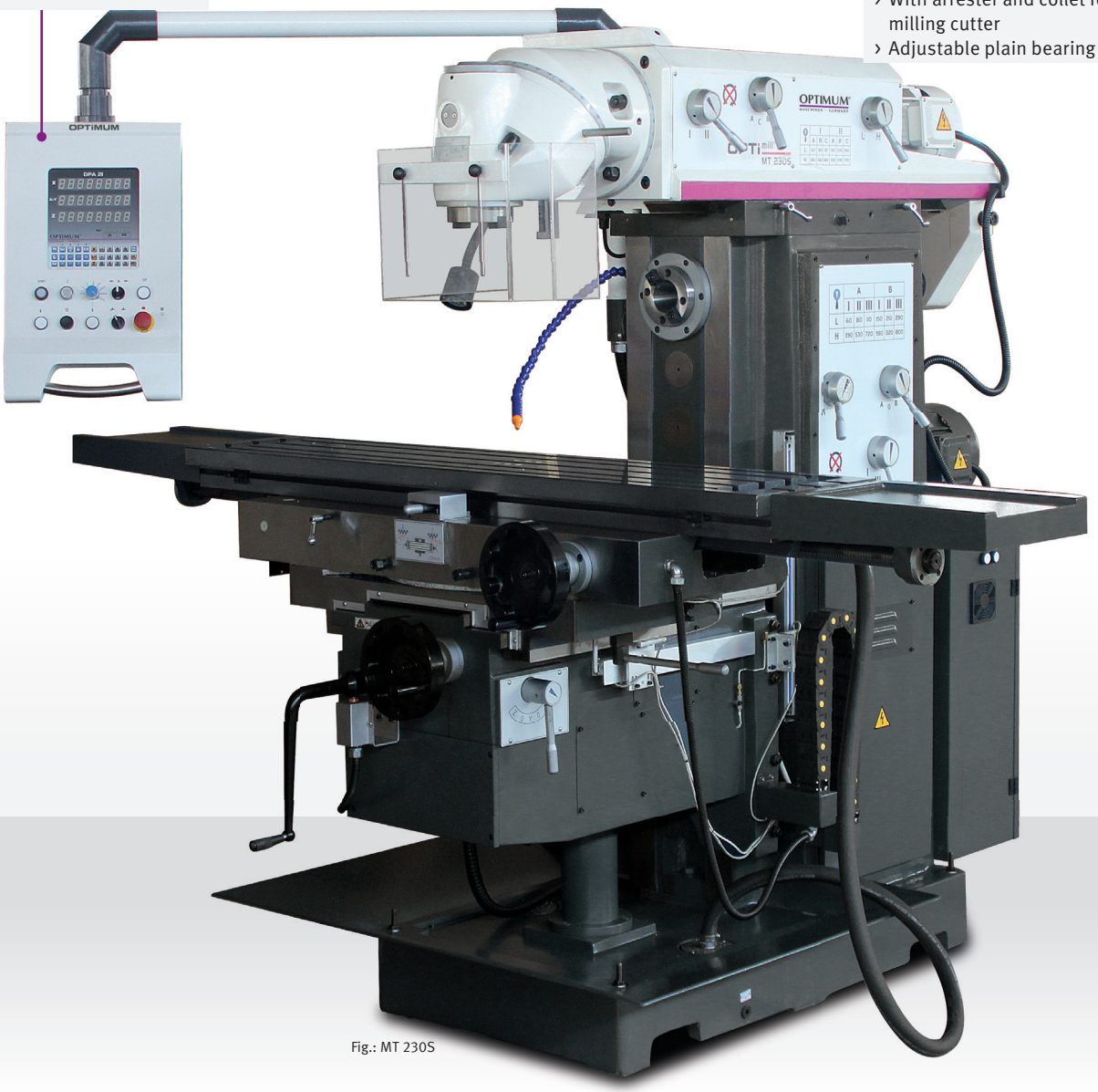

Fig.: MT 230S

*OPTImill® is a registered brand of Optimum Maschinen Germany GmbH and exclusively used for milling machines

Technical specifications, accessories and dimensions

DPA

Model	MT 230S
Article no.	3344125
Output	
Electrical connection	400 V / 3 Ph ~50 Hz
Total rated value	12 kW
Vertical drive motor	4 kW
Horizontal drive motor	5.5 kW
Coolant pump motor	90 Watts
Milling capacity	
Max. sensor head size	Ø 160 mm
Max. shaft milling cutter size	Ø 25 mm
Spindle	
Spindle seat	ISO 50 DIN 2080
Drawbar	M24
Vertical	
Clearance spindle to table	190 - 590 mm
Throat	260 - 810 mm
Spindle speeds	60 - 1 750 rpm
Speeds	12 speeds
Milling head forward tilt	90°
Rotation of milling head	360°
Horizontal	
Clearance spindle to table	10 - 410 mm
Spindle speeds	60 - 1 800 rpm
Speeds	12 speeds
Cross table	
Table length x width	1 650 x 360 mm
Cross table max. load bearing capacity	400 kg
T-slot size size/amount/distance	18 mm / 3 / 80 mm
Rotating cross table	35°
X axis (Cross table)	
Travel	manual 1 300 mm / automatic ~1 220 mm
Table feed automatic	30 - 750 mm/min.
Table feed rapid motion	1 200 mm/min
Y axis (Cross table)	
Travel	manual 300 mm / automatic ~220 mm
Table feed automatic	20 - 500 mm/min.
Table feed rapid motion	800 mm/min
Z axis (Cross table)	
Travel	manual 400 mm / automatic ~320 mm
Table feed automatic	15 - 375 mm/min.
Table feed rapid motion	600 mm/min
Dimensions and weight	
Length x width x height	2 550 x 2 160 x 2 005 mm
Net weight	2 800 kg

Dimensions

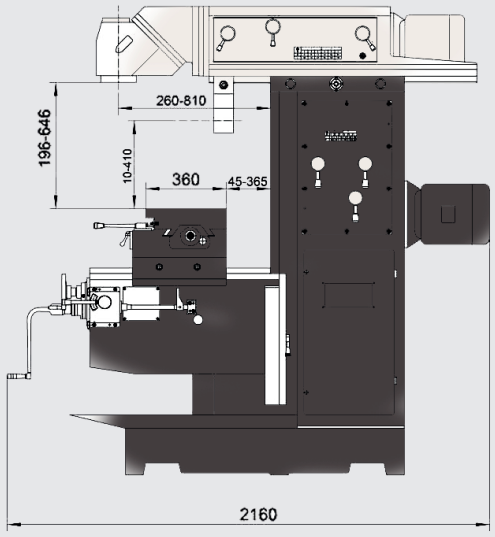

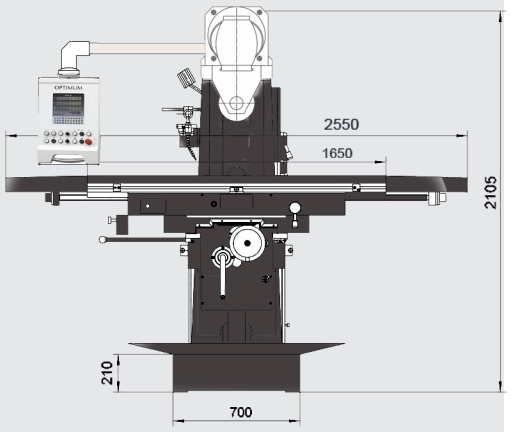

Scope of delivery
› Cutter spindle horizontal milling ISO 50 Ø 22 mm
› Cutter spindle horizontal milling ISO 50 Ø 27 mm
› Adapter sleeve ISO 50 (7:24) / MT 4
› Drawbar horizontal and vertical M24
› Operating tool

Accessories	Article no.
Parallel shim set, 20-part	3354001
Assortment of clamping tools size 16, 58-part size	3352017
Collet chuck set ISO 50/ER32	3352065
Precision machine shoe SEU1 (4 units required)	3352985
Blank holder set of 2 18 mm/M16	3352032
Morse cone ISO50 B18 DIN2080	3352067
Precision bore head set ISO 50	3352129
› More accessories for milling machines from page 139 › Extension/accessories for coolant systempage 320	

Machine vises	Article no.
FMS 200	3354200
HMS 125	3355127
MV3-75	3354175
MV3-125	3354178
ZAS 50	3354170
DAS 100	3355500
HCV 105	3536210
HCV 125	3536214
› Informationen from page 139	

Note: The milling machines (frequency inverters) comply with standard DIN EN 55011: class C2.
Important information on operation of machines with frequency converters on page 323.

Tool milling machines with digital 3-axis position display DP 700 by NEWALL . With inverter drive on feed axes controllable via control panel.

Facts that impress in terms of quality, performance and price

- Versatile range of applications
- Excellent damping characteristics and stability of machine mobile chassis
- All guides tempered, precision ground, and adjustable using cleats
- Automatic feed on X, Y and Z axis, continuously adjustable via an electronic joystick on the control panel
- Electrical feed limit shut-off
- Central and clearly arranged control panel with integrated digital position and speed display
- Solid cross table, generously dimensioned with precision surface finish
- Coolant system
- Generously dimensioned hand wheels with scales
- Machine lamp
- Smooth action

MZ 2S:
- Manual centralised lubrication system

MZ 4S:
- Automatic centralised lubrication

Control cabinet

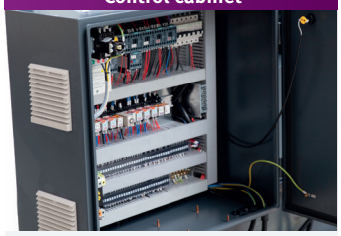

› Electrical system with SIEMENS components

OPTIControl panel



› Swivels centrally for a clear-cut overview
› Automatic feed on X, Y and Z axis, continuously adjustable via an electronic joystick on the control panel
› Integrated **digital position display DPA 700**

Ball screw

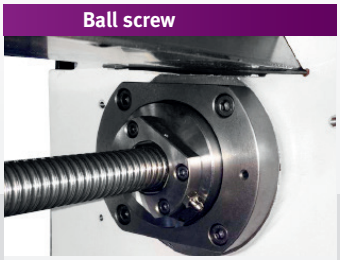

› on all axes
› Higher precision
› Lower reversing play

Cross table housing

› Supplied pre-assembled on the machine
› Protection against chips and splash water
› Folds away to allow optimal access to the workspace



Fig.: MZ4S



Fig.: MZ 4S

*OPTImill® is a registered brand of Optimum Maschinen Germany GmbH and exclusively used for milling machines

Technical data and accessories

DPA

Model	MZ 2S	MZ 4S
Article no.	3346235	3346245
Output		
Electrical connection	400 V / 3 Ph ~50 Hz	
Total rated value	4 kW	5.4 kW
Drive motor	2.2 kW	3.75 kW
Motor rapid motion/feed	0.375 kW	0.75 kW
Coolant pump motor	95 W	
Drilling/milling output		
Drilling performance in steel (S235JR)	Ø 30 mm	Ø 32 mm
Continuous drilling performance steel (S235JR)	Ø 26 mm	Ø 28 mm
Max. sensor head size	Ø 100 mm	Ø 100 mm
Max. shaft milling cutter size	Ø 25 mm	Ø 25 mm
Spindle		
Spindle sleeve stroke	120 mm	
Spindle seat	ISO 40 DIN 2080	
Drawbar	M16	
Speed range		
Spindle speeds	50 - 1 890 rpm	30 - 2 250 rpm
Speeds	12 speeds	18 speeds
Speed range after optional Vario conversion with SIEMENS inverter (on page 136)		
Spindle speeds	20 - 2 500 rpm	20 - 3 045 rpm
Speeds	2 x 6 speeds	2 x 6 speeds
Vertical		
Vertical rotation area	± 90°	
Distance between spindle nose - cross table	75 - 410 mm	70 - 400 mm
max. reach	100 mm	185 mm
Vertical cross table length x width	830 x 250 mm	1 200 x 250 mm
Max. load	1,100 Nm	1,800 Nm
T-slot size / distance / amount	14 mm / 63 mm / 2	14 mm / 63 mm / 3
Horizontal		
Clearance horizontal spindle to cross table	70 - 400 mm	130 - 390 mm
Horizontal cross table length x width	750 x 320 mm	900 x 500 mm
Max. load bearing capacity	285 kg	360 kg
T-slot size / distance / amount	14 mm / 63 mm / 5	14 mm / 63 mm / 7
Stroke during feed		
X axis (cross table)	manual 400 mm / automatic ~310 mm	manual 600 mm / automatic ~510 mm
Y axis (milling head)	manual 200 mm / automatic ~160 mm	manual 480 mm / automatic ~440 mm
Z axis (cross table)	manual 335 mm / automatic ~295 mm	manual 390 mm / automatic ~345 mm
Drive speed feed/rapid motion	50 - 450 rpm / 700 rpm	50 - 450 rpm / 780 rpm
Feed speed	10 - 600 mm/min.	10 - 600 mm/min.
Dimensions and weight		
Length x width x height	1 239 x 1 168 x 1 900 mm	1 610 x 1 825 x 1 885 mm
Net weight	1400 kg	1 890 kg

Accessories	Article no.
Hydraulic clamping device DIN 69871 ex works only	3346226
Compressed air tool changer	3346225
Adapter set for connection of compressed air tool changer	3346224
Vibration damping machine base SE 55 (4 units required)	3352981
› More accessories for milling machines from page 139	

Angled table	3346221
› Table length x width 375 x 660 mm . Max. load bearing capacity 150 kg	
› T-slot size / distance / amount: 12 mm / 8 / 45 mm	
› Dimensions 895 x 433 x 354 mm	
› Weight 140 kg	

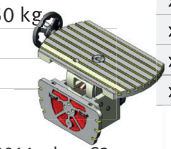

See page 136 for Vario conversions



Scope of delivery
› Adapter ISO 40 / MT 3
› MT Weldon and MT shank
› Arbour ISO 40 with counter-bearing 27 mm outer diameter
› Operating tool

Note: The milling machines (frequency inverters) comply with standard DIN EN 55011: class C3.
Important information on operation of machines with frequency converters on page 323.

NEW

Vario conversion
for MZ 4S milling machine

Vario drive with SIEMENS Sinamics G 110M inverter drive
› With integrated EMC filter
› Low-noise motor operation thanks to high pulse frequency
› Status information and alarm messages via the optional control panel (BOP)
› Fast current limitation (FCL) for trouble-free operation in case of sudden load peaks





Control cabinet

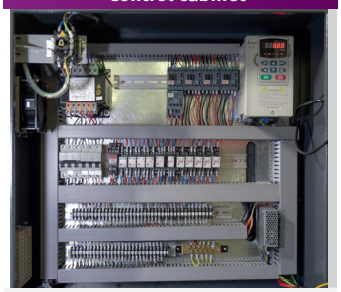

› Clear-cut

Vario conversion for MZ 4S milling machine	3491120
› With SIEMENS G 110M inverter	
› Motor output 4 kW	
› Speeds 48 - 3 045 rpm 6 gears	

ACCESSORIES MILLING MACHINES



Compatibility overview vises

Accessories		Article no.	BF 16V	MH 20	MH 22	MH 25	MB 4	MH 35 /V	MH 50 /V	MB 4P	MB 4PV	MT 50E	MT 50	MT 60	MF 2-B	MF 4-B	MF 2V	MF 4V	MT 130S	MT 100	MT 200	MT 230S	MZ 2S	MZ 4S
Machine vices FMS	100	3354100	●	●	●	●	●			●	●													
	125	3354125					●	●	●	●	●	●	●	●	●		●						●	●
	150	3354150														●		●	●	●			●	●
	200	3354200																			●	●		
Machine vices HMS	100	3355100					●	●		●	●													
	125	3355127													●	●	●	●	●	●	●	●	●	●
	150	3355150																						●
	200	3355200																					●	●
Machine vices FMSN	100	3354110	●	●	●	●																		
	125	3354120					●	●	●	●	●	●	●	●	●		●						●	●
	150	3354130														●		●	●	●			●	●
Machine vices VMQ	80	3354180	●	●	●	●																		
	100	3354181	●	●	●		●	●	●	●	●	●	●	●	●		●						●	●
	125	3354182														●		●	●	●			●	●
	150	3354183																					●	●
Three-axis vices MV3	75	3354175	●	●	●	●	●	●	●	●	●	●	●	●	●	●	●	●	●	●	●	●	●	●
	125	3354178											●	●	●	●	●	●	●	●	●	●	●	●
Two-axis vice ZAS	50	3354170	●	●	●	●	●	●	●	●	●	●	●	●	●	●	●	●	●	●	●	●	●	●
Three-axis vice DAS	100	3355500					●	●	●	●	●	●	●	●	●	●	●	●	●	●	●	●	●	●
Machine vice HCV	105	3536210															●	●	●	●	●	●	●	●
	125	3536214															●	●	●	●	●	●	●	●
Machine vice MVSP	150 x 200	3530104																					●	●
	150 x 200	3530108																					●	●

Precision machine vices FMS

› Robust design for milling, drilling and grinding
› Vice body made of premium cast material
› Guide surfaces tempered and polished
› Hardened and polished clamping jaws, replaceable
› With turntable, rotating through 360°

Vice	Article no.
FMS 100	3354100
FMS 125	3354125
FMS 150	3354150
FMS 200	3354200

Prism jaws	Article no.
for FMS 100	3354102
for FMS 125	3354127
for FMS 150	3354152
for FMS 200	3354202

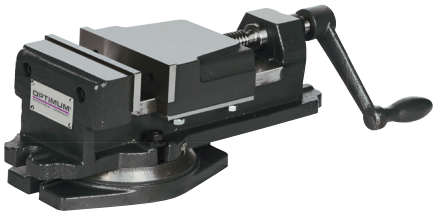

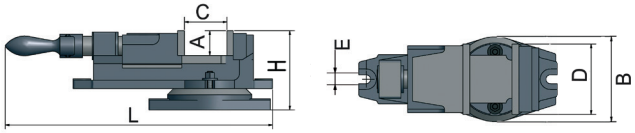

Dimensions		A	C	D	E	L	B	H	kg
FMS 100	mm	30	62	100	13	295	124	100	11
FMS 125	mm	37	85	125	13	370	148	128	17
FMS 150	mm	40	114	150	13	462	180	145	28
FMS 200	mm	58	150	200	16.5	620	237	202	58

Precision machine vices HMS

▶ Robust design for milling, drilling and grinding
▶ Vice body made of premium cast material
▶ Guide surfaces tempered and polished
▶ Booster system: requires little force, high pressure build-up during clamping
▶ Large clamping range due to lock bolts with various hole spacings
▶ With turntable, rotating through 360° . Protected spindle

Vice	Article no.
HMS 100	3355100
HMS 125	3355127
HMS 150	3355150
HMS 200	3355200

Prism jaws	Article no.
for HMS 100	3355102
for HMS 125	3355129
for HMS 150	3355152
for HMS 200	3355202

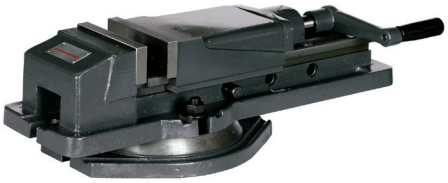

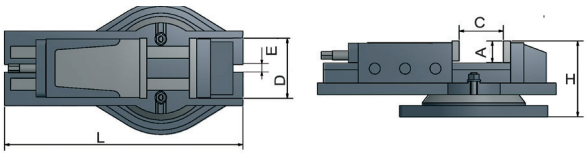

Dimensions		A	D	E	L	B	H	kg
HMS 100	mm	36	100	15	525	Ø 270	122	27
HMS 125	mm	46	127	16	670	Ø 290	151	46
HMS 150	mm	51	150	17	800	Ø 328	169	64
HMS 200	mm	65	200	19	710	Ø 358	158	100

C	Span			Clamping pressure	
HMS 100	0-60 mm	57-115 mm	110-170 mm	2 500 kg	24.5 kN
HMS 125	0-76 mm	72-150 mm	146-224 mm	4 000 kg	39.25 kN
HMS 150	0-100 mm	98-200 mm	195-300 mm	4 500 kg	44.1 kN
HMS 200	0-100 mm	98-200 mm	195-300 mm	7 500 kg	73.6 kN

Precision machine vices FMSN

› Vice body made of premium cast material
› Guide surfaces tempered and polished
› Hardened and polished clamping jaws, replaceable
› Protected spindle
› Clamping outward by repositioning the clamping jaws
› With turntable, rotating through 360°

Vice	Article no.
FMSN 100	3354110
FMSN 125	3354120
FMSN 150	3354130

Prism jaws	Article no.
for FMSN 100	3354112
for FMSN 125	3354122
for FMSN 150	3354132



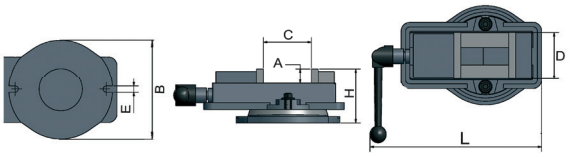

Dimensions		A	C	D	E	L	B	H	kg
FMSN 100	mm	36	101	100	14.5	319	Ø 240	319	19
FMSN 125	mm	36	108	135	16.5	369	Ø 278	369	29
FMSN 150	mm	46	146	155	18.5	425	Ø 332	425	36

Milling machine vises	Article no.
› Robust design for milling, drilling and grinding	
› Vice body made of premium cast material	
› Guide surfaces tempered and polished	
› Hardened and polished clamping jaws	
› With turntable, rotating through 360°	
VMQ 80	3354180
VMQ 100	3354181
VMQ 125	3354182
VMQ 150	3354183

Technical data		A	C	D	L	B	H	kg
VMQ 80	mm	26	80	80	305	160	100	9.5
VMQ 100	mm	34	105	105	385	222	126	21
VMQ 125	mm	36	130	134	430	247	135	30
VMQ 150	mm	46	145	158	488	290	162	39

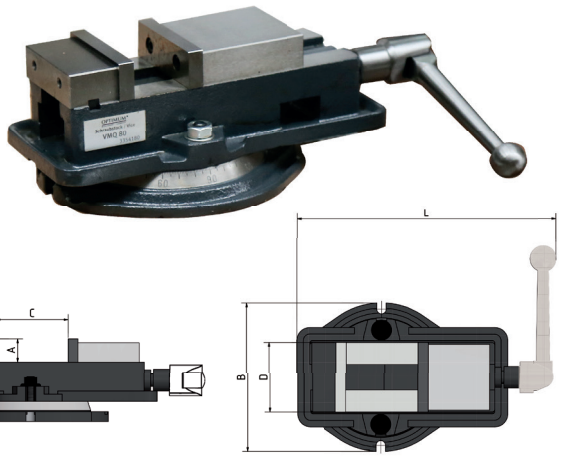

Three-axis vice	Article no.
› Horizontal swivel movement to 90°	
› Vertical swivel movement to ± 45°	
› Hardened and polished clamping jaws	
› With turntable, rotating through 360°	
MV3-75	3354175
MV3-125	3354178

Technical data		A	C	D	E	L	B	H	kg
MV3-75	mm	34	82	75.5	12	380	139	150	11
MV3-125	mm	45	97	125	12	290	185	206	26

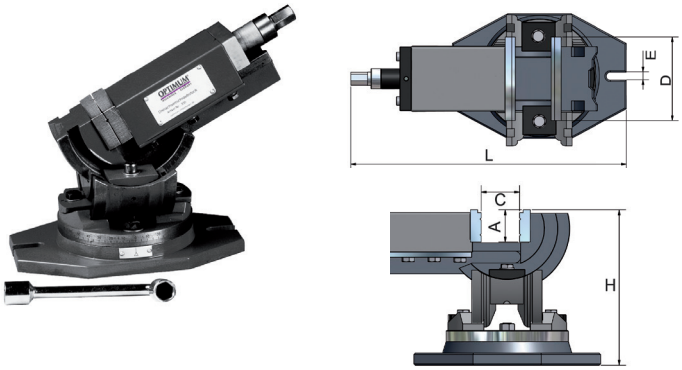

Two-axis vice	Article no.
› Tilts to -900	
› Hardened and polished clamping jaws	
› Easily readable scales for both axes	
› With turntable, rotating through 360°	
› Weight 3.4 kg	
ZAS 50	3354170

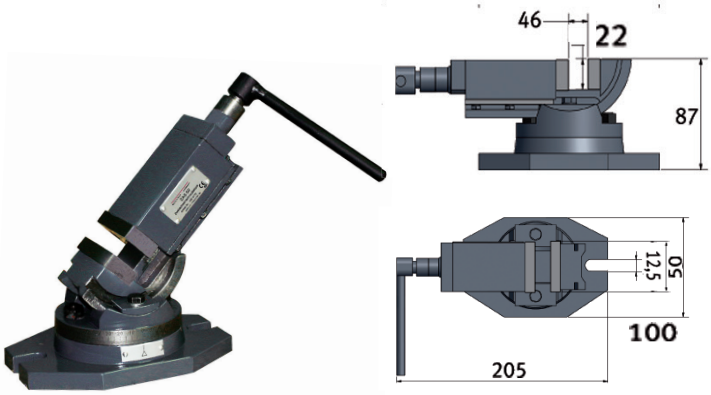

Three-axis vice	Article no.
› Premium cast material	
› Guide surfaces tempered and polished	
› With turntable, rotating through 360°	
› Horizontal swivel movement to 90°	
› Vertical swivel movement to ± 45° above thread spindle	
› Net weight: 32 kg	
DAS 100	3355500
Prism jaws	3355502



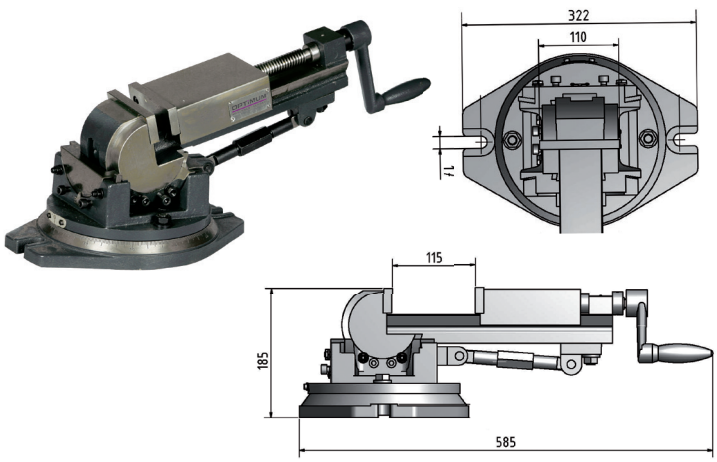

Hydraulic milling machine vise	Article no.
› High precision and repetition accuracy for series production and batch-size-one machining on CNC milling machines	
› Robust design for milling	
› Guide surfaces tempered and polished	
› Booster system: requires little force, high pressure build-up during clamping	
› Large clamping range due to lock bolts with various hole spacings	
› Made of premium grade stainless steel	
HCV 125	3536214
Soft jaws 2 units	3536221
L jaws 2 units	3536222

Span	Clamping pressure		Weight
0 - 205 mm	4 000 kg	39.2 kN	35.4 kg

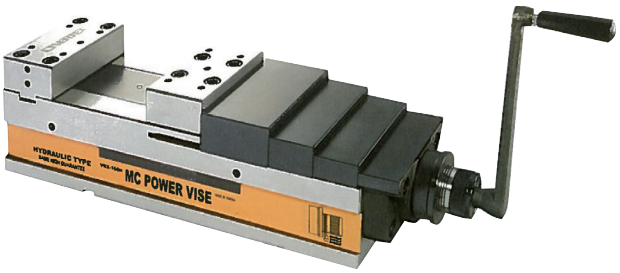

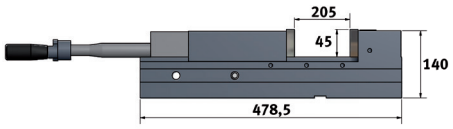

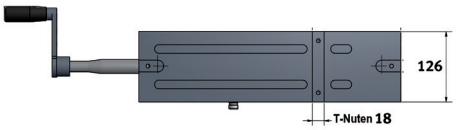

Hydraulic milling machine vise	Article no.
› High precision and repetition accuracy for series production and batch-size-one machining on CNC milling machines and machining centres	
› Robust design for milling	
› Guide surfaces tempered and polished	
› Booster system: requires little force, high pressure build-up during clamping	
› Large clamping range due to lock bolts with various hole spacings	
› Made of premium grade stainless steel	
› Long service life thanks to high quality	
› High clamping force	
HCV 105	3536210

C	Span		Clamping pressure		Weight
	0 - 85 mm	85 - 170 mm	2 500 kg	24.5 kN	22 kg

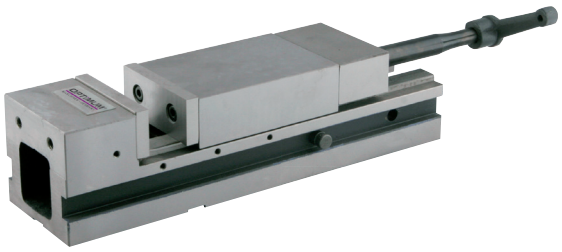

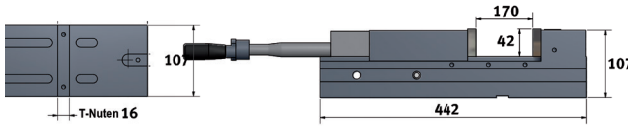

Modular milling machine vise	Article no.
› hydraulic	
› High precision and repetition accuracy for series production and batch-size-one machining on CNC milling machines and machining centres	
› Robust design for milling	
› Made completely of NiCrMo steel with hardness HRC60, tolerance 0.0015 mm	
› Mobile jaws with extra long guides to prevent lift-off and slingshot risk	
› Guide surfaces tempered and polished	
› Large clamping range due to lock bolts with various hole spacings	
› Long service life thanks to high quality	
› Includes spanner	
› Model MVSP with fixed jaws	
MVSP 150 x 200	3530104
MVSP 150 x 300	3530108

Technical data		A	C	E	L	B	H	kg
MVSP 150 x 200	mm	50	205	16	480	149	100	34
MVSP 150 x 300	mm	50	305	16	580	149	100	38.6

MADE IN EU

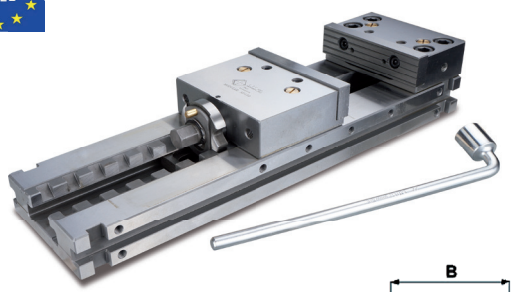

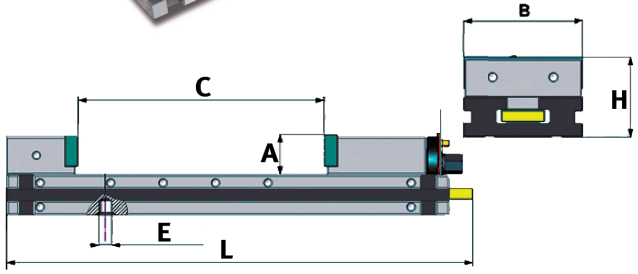

Compatibility overview accessories for milling machines

Accessories		Article no.	BF 16	MH 20	MH 22	MH 25	MB 4	MH 35 /V	MH 50 /V	MB 4P	MB 4PV	MT 50E	MT 50	MT 60	MF 2-B	MF 4-B	MF 2V	MF 4V	MT 130S	MT 100	MT 200	MT 230S	MZ 2S	MZ 4S
			MT 2	MT 2	BT 20	BT 30	MT 4	BT 30	BT 40	MT 4	MT 4	ISO 40	ISO 40	ISO 40	ISO 40	ISO 40	ISO 40	ISO 40	ISO 40	ISO 40	ISO 40	ISO 50	ISO 50	ISO 40
Horizontal-vertical rotary indexing table	RT 100	3356110	○	○	○	●	●	●	●	●	●	●	●	●	●	●	●	●	○	○	○	○	○	○
	RT 150	3356150					●	●	●	●	●	●	●	●	●	●	●	●	●	●	●	●	●	●
	RT 200	3356200										●	●	●	●	●	●	●	●	●	●	●	●	●
Horizontal-vertical rotary indexing table	RTE 165	3356365					●	●	●	●	●	●	●	●	●	●	●	●	●	●	●	●	●	●
	RTU 165	3354165					●	●	●	●	●	●	●	●	●	●	●	●	●	●	●	●	●	●
Universal dividing head	TA 125	3356125					○	○	○	○	○	○	●	●	○	○	○	○	●	●	●	●	●	●
End mill set HSS	12-part	3352250	●	●	●	●	●	●	●	●	●	●	●	●	●	●	●	●	●	●	●	●	●	●
	20-part	3352255	●	●	●	●	●	●	●	●	●	●	●	●	●	●	●	●	●	●	●	●	●	●
Twist drill HSS	MT 2	3051002					●																	
	MT 3	3051003					●		●								●	●	●	●			●	●
Twist drill set	25-part	3201010	●	●	●	●	●	●	●	●	●	●	●	●	●	●	●	●	●	●	●	●	●	●
	51-part	3201020	●	●	●	●	●	●	●	●	●	●	●	●	●	●	●	●	●	●	●	●	●	●
	41-part	3201021	●	●	●	●	●	●	●	●	●	●	●	●	●	●	●	●	●	●	●	●	●	●
Milling cutter set HM	Hard metal	3352118	●	●	●	●	●	●	●	●	●	●	●	●	●	●	●	●	●	●	●	●	●	●
	Radius	3352116	●	●	●	●	●	●	●	●	●	●	●	●	●	●	●	●	●	●	●	●	●	●
Assortment of clamping tools	Size 8	3352015	●																					
	Size 10	3352016		●	●	●		●																
	Size 12	3352017					●			●	●	●	●	●					●	●	●		●	●
	Size 14	3352018													●	●	●	●						
	Size 16	3352019							●													●		
Edge sensor		3351171	●	●	●	●	●	●	●	●	●	●	●	●	●	●	●	●	●	●	●		●	●
Quick release chuck	1 - 8 mm B16	3050608	●	●	●	○	●	○	●	●	●	●	●	●	●	●	●	●	○	○	○	○	●	●
	1 - 10 mm B16	3050610	●	●	●	○	●	○	●	●	●	●	●	●	●	●	●	●	○	○	○	○	●	●
	1 - 16 mm B18	3050630																						
	0 - 13 mm B16	3050632	●	●	●	○	●	○	●	●	●	●	●	●	●	●	●	●	○	○	○	○	●	●
	0 - 16 mm B16	3050633	●	●	●	○	●	○	●	●	●	●	●	●	●	●	●	●	○	○	○	○	●	●
Morse cone	SK50 B18	3352067																			●	●		
Extension sleeve	MT 2 - MT 3	3050667	●	●																				
	MT 3 - MT 4	3050668																						
Reduction sleeve	MT 3 - MT 2	3350313							●								●	●	●	●			●	●
	MT 4 - MT 3	3350314					●			●	●													
Arbour for drill chuck	MT 2	3050670	●	●																				
	MT 4	3350304					●			●	●													
	ISO 40	3352070										●	●	●	●	●	●	●	●	●			●	●
Shank Blade head	MT 2	3352102	●	●																				
Copying and facing blade head	BT 20	3350202			●																			
	BT 30	3350203				●		●																
	MT 2/M10	3350212	●	●																				
	BT 40	3350204																						
	MT 4/M16	3350214					●			●	●													
	ISO 40	3350216							●				●	●	●	●	●	●	●	●			●	●
Pull stud	BT 20	3352726			●																			
	BT 30	3536302						●																
	BT 40	3536332							●															
Precision Bore head set	ISO 40	3352128										●	●	●	●	●	●	●	●	●			●	●
	ISO 50	3352129																			●	●		

Accessories		Article no.	BF 16	MH 20	MH 22	MH 25	MB 4	MH 35 /V	MH 50 /V	MB 4P	MB 4PV	MT 50E	MT 50	MT 60	MF 2-B	MF 4-B	MF 2V	MF 4V	MT 130S	MT 100	MT 200	MT 230S	MZ 2S	MZ 4S
			MT 2	MT 2	BT 20	BT 30	MT 4	BT 30	BT 40	MT 4	MT 4	ISO 40	ISO 40	ISO 40	ISO 40	ISO 40	ISO 40	ISO 40	ISO 40	ISO 40	ISO 40	ISO 40	ISO 50	ISO 50	ISO 40
Bore head set	MT 4	3352125					●			●	●													
Collet chuck set	MT 2/ER25	3352052	●	●																				
	MT 2/ER32	3352053	●	●																				
	MT 4/M16	3352094					●			●	●													
	ISO 30	3352054																						
	ISO 40	3352056										●	●	●	●	●	●	●	●	●			●	●
	ISO 50	3352065																			●	●		
Collet kit	ER 16	3440282			●																			
	ER 25	3441109	●	●																				
	ER 32	3441122				●	●	●	●	●	●	●	●	●	●	●	●	●	●	●	●	●	●	●
Collet chuck set, direct	MT 2	3351980	●	●																				
Levelling platen	SE 1	3381012	●	●	●	●	●	●	●	●	●													
	SE 2	3381016										○	○	○*	○*	○*	○*	○*	○*	○*	○*	○*		
			*Long threaded rod required (not included in scope of supply!)																					
	SE 3	3381018																						
Vibration damping machine base	SE 55	3352981	●	●	●	●	●	●	●	●	●												●	●
	SE 85	3352982										●	●	●	●	●	●	●						
Precision machine shoe	SEU1	3352985										●	●	●	●	●	●	●	●	●	●	●		
Try square 90	90°	3385052				●	●	●	●	●	●	●	●	●	●	●	●	●	●	●	●	●	●	●
Prism elbow	WP 30	3352195	●	●	●	●	●	●	●	●	●													
Table feed	V 99S	3352021					●	●	●															
	V 250S	3352025															●	●						
Tool clamping system	ISO 40	3352394															●	●						
Thread tapper	M5-M12	3352042	●	●	●	●	○	○	○	○	○	●	●	●	●	●	●	●	●	●	●	●	●	●
Workpiece support	WPS-1	3354261	●	●	●	●	●	●	●	●	●													
	WPS-2	3354262	●	●	●	●																		
	WPS-3	3354263					●	●	●	●	●													
	WPS-4	3354264					○	○	○	○	○	●	●	●										
T-slot nut	M8 -10 mm	3353020	●																					
	M10 -12 mm	3353022		●	●	●		●																
	M12 -14 mm	3353025					●			●	●	●	●	●					●	●	●	●	●	●
	M14 -16 mm	3353026													●	●	●	●						
	M16 -18 mm	3353028							●															
Blank holder	14 mm	3352031					●			●	●	●	●	●										
	18 mm	3352032							●															
Parallel spacer kit		3354001	●	●	●	●	●	●	●	●	●	●	●	●	●	●	●	●	●	●	●	●	●	●
Coolant pump	230 V	3351999	●	●	●	●	●	●	●															
Coolant hose	KMS 2	3356660	●	●	●	●	●	●	●															
Coolant mist lubricator	MMC 1	3356663	●	●	●	●	●	●	●															
Starter set	BT 20	3353281			●																			
	BT 30	3353282				●		●																
	BT 40	3353284							●															
Chassis	MSM 1	3353000	●	●	●																			
	MSM 2	3353009				●																		
	MSM 3	3353014					●	●																
	MSM 4	3353015							●															

Horizontal-vertical rotary indexing tables

- Quality rotary indexing tables made of premium cast meehanite
- Work table with 360° scale
- Precision bearing
- 1 revolution of handwheel 4° rotation
- Stability also under high load
- Scale division on handwheel 2'
- Large spindle bore for clamping longer workpieces
- Indexing via handwheel with vernier scale possible
- Worm gear tempered and polished

- **3356110 - RT 100** - Angle degree dividing over 360 degree angle scale, slot 11 mm (M10), indirect indexing plates not supported
- **3356150 - RT 150** - Angle degree dividing over 360 degree angle scale, slot 11 mm (M10), large number of indirect divisions possible with with optional indexing plate
- **3356200 - RT 200** - Angle degree dividing over 360 degree angle scale, slot 16 mm (M16), large number of indirect divisions possible with with optional indexing plate

Technical data		RT 100	RT 150	RT 200
Centring taper		MT 2	MT 2	MT 3
Transmission ratio		90:1	90:1	90:1
Mounting surface diameter	mm	110	150	200
Height x length x width	mm	72 x 138 x 118	79 x 204 x 156	104 x 265 x 199
Centre height	mm	80	102	133
Slot width/amount	mm	11/3	11/3	16/3
Net weight	kg	5	10	25

Horizontal-vertical rotary indexing table RT 100

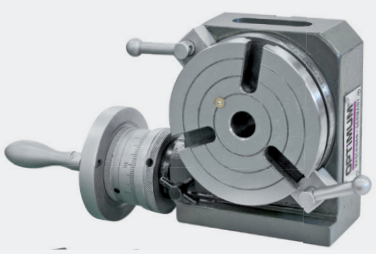

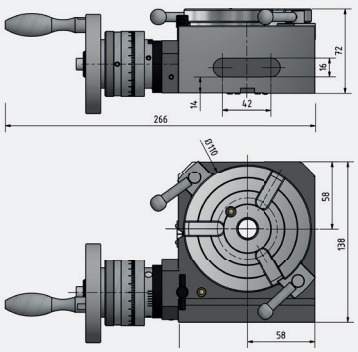

	Article no.
Rotary indexing table RT 100 › 2 clamping blocks › Centring taper MT 2	3356110
Three-jaw lathe chuck Ø 85 mm	3356111
Tailstock Rst 1 › Centre height 72 - 108 mm	3356155



Horizontal-vertical rotary indexing table RT 150

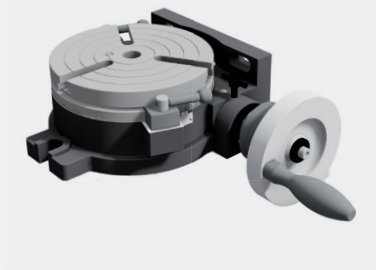

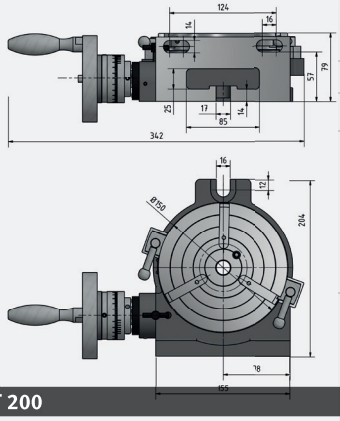

	Article no.
Rotary indexing table RT 150 › 2 clamping blocks › Centring taper MT 2	3356150
Chuck flange	3356154
Three-jaw lathe chuck Ø 125 mm centric	3356100
Indirect indexer IT 150 › 3 Indexing disks › Sector arm › Angle shears with spring plate	3356152
Tailstock Rst 1 › Centre height 72 - 108 mm	3356155

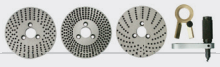



Horizontal-vertical rotary indexing table RT 200

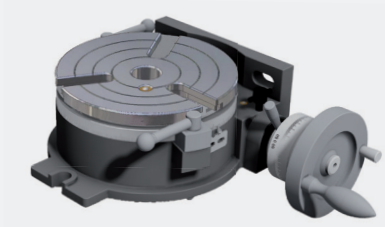

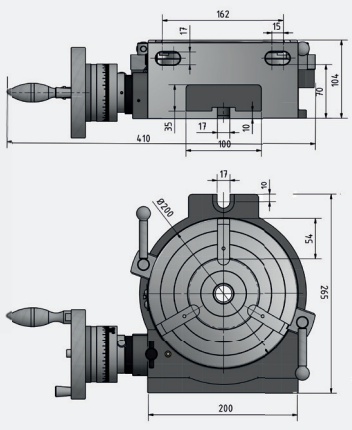

	Article no.
Rotary indexing table RT 200 › 2 clamping blocks › Centring taper MT 3	3356200
Chuck flange including 3 slot nuts	3356254
Three-jaw lathe chuck Ø 165 mm	3356225
Indirect indexer IT 200 › 2 Indexing disks › Sector arm › Angle shears with spring plate	3356205
Tailstock Rst 2 › Centre height 110 - 145 mm	3356157

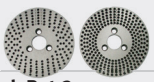



Horizontal-vertical rotary indexing table with 3-jaw chuck

- Quality rotary indexing tables made of premium cast meehanite
- Precision taper roller bearing
- Stability also under high load
- 24 positions (15° indexing)
- Large spindle bore for clamping longer workpieces
- Three-jaw chuck
- Direct indexing via serrated locking plates for higher production speeds for mass-produced parts
- Including clamping disc with 3 grooves
- **3354165 - RTU 165** – 24 divisions with direct indexing disc and angular degree divisions over 360 degree angle scale - no slot, three-jaw chuck mounted, large number of indirect divisions possible with with optional indexing disc
- Degree indexing via 360° scale with crank and vernier scale
- **3356365 - RTE 165** - 24 divisions with direct indexing disc and angular degree divisions over 360 degree angle scale - no slot, three-jaw chuck mounted, no indirect
- 7 serrated locking plates for 2/3/4/6/8/12/24x divisions
- Degree divisions via 360° scale

Technical data		RTE 165	RTU 165
Mounting surface diameter	mm	165	165
Closed height x width x length	mm	200 x 260 x 218	221 x 250 x 235
Centre height	mm	130	130
Clamping disc	mm	203	203
Passageway	mm	36	36
Net weight	kg	32.5	48

Technical data	RTE 165	RTU 165
Direct indexing disc	24x division (= 15°)	
Indirect indexing disc	2, 3, 4, 6, 8 and 12x division	
Indexing precision of direct indexer	45‘	
Clamping options	Horizontal and vertical	
Workpiece mounting surface	With scale 360°	

Horizontal-vertical rotary indexing table RTE 165	Article no.
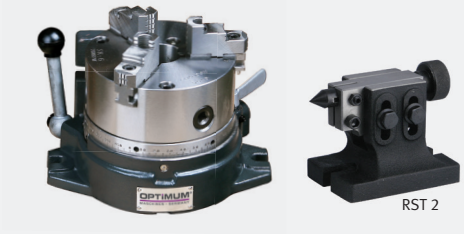 RST 2 **Rotary indexing table RTE 165** › 3-jaw chuck (mounted) › Clamping disc › Main indexing disk (24x division, mounted) › 6 Indexing disks	3356365
Tailstock Rst 2 › Centre height 110 - 145 mm	3356157

Horizontal-vertical rotary indexing table RTU 165	Article no.
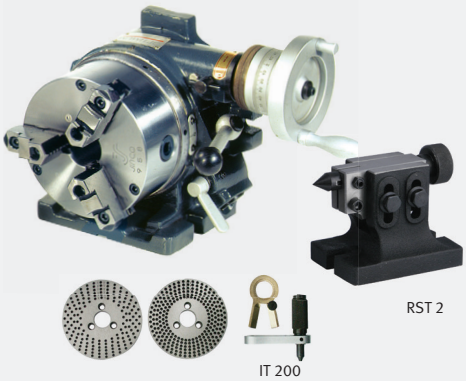 RST 2 IT 200 **Rotary indexing table RTU 165** › 3-jaw chuck (mounted) › Clamping disc › Main indexing disk (24x division, mounted) › 6 Indexing disks › Grips for handwheel	3354165
Indirect indexer IT 200 › 3 Indexing disks › Sector arm › Angle shears with spring plate	3356205
Tailstock Rst 2 Centre height 110 - 145 mm 72 - 108 mm	3356157

Universal dividing head TA 125

3356125

- Swivels from -10° to +90°
- Hardened and polished worm gear
- Precision taper roller bearing
- Hardened and polished main indexing disc (24x division), to index directly at 15°
- Up to 300 indexing options possible with indirect indexing disks



Scope of delivery
- Tailstock Rst1 (peak height 72 - 108 mm)
- Centre point 60° / MT 2
- Lathe dog (tang)
- Chuck flange (Ø 140 mm, t = 12 mm) for carrier pin or mounting a lathe chuck
- 3 units Indirect indexing disc

Technical data	
Transmission ratio	40:1
Closed height x width with centre x length	175 x 205 x 230 mm
Centre height	100 mm
Bore in mounting shaft (keyway)	18 mm
Slot width	16 mm
Direct indexing disc (Pitch)	15°/ Ø 110 mm
Indirect indexing disc (Bore on reference circle)	15, 16, 17, 18, 19, 20, 21, 23, 27, 29, 31, 33, 37, 39, 41, 43, 47
Concentricity	0.015 mm
Net weight	12 kg

Accessories	Article no.
End mill set HSS	
› Titanium coated	
› Improved hardness and stability with 2x to 5x service life	
› Twice the machining performance	
› Improved workpiece finish	
› Cylindrical shank and lateral lugs	
› Version with 2 cutting edges for milling keyways/fixing grooves and milling out the workpiece centre	
› Vertical or lateral milling possible	
› Version with 4 cutting edges and 30° right-hand twist for good chip removal in normal to hard materials	
12-part	3352250
› 6 end mills, short version · Version with 2 cutting edges. DIN 1835 B (Ø12x73, Ø10 x 63, Ø8 x 61, Ø6 x 52, Ø5 x 52, Ø4 x 51 mm)	
› 6 end mills, short version · Version with 4 cutting edges. DIN 1835 B (Ø12 x 83, Ø10 x 73, Ø8 x 61, Ø6 x 57, Ø5 x 57, Ø4 x 55 mm)	
20-part	3352255
› 10 end mills DIN 327 D · Short version · 2 cutting edges DIN 1835 B, (3/4/5/6/8/10/12/14/18/20 mm)	
› 10 end mills DIN 844 B · Short version · 4 cutting edges DIN 1835 B, (3/4/5/6/8/10/12/14/18/20 mm)	



Carbide end mill set	3352118
› **18-part**; 3 each in the sizes 3/4/6/8/10 and 12 mm	
› 4-cutting edge version	
› Coated solid carbide end mill (TiALN)	
› Centre cut for plunging	
› Rake angle 35°	



Radius end mill set	3352116
› **9-part**; 3 each in the sizes 4 mm / 6 mm /8 mm	
› 2-cutting edge version	
› Coated solid carbide end mill (TiALN)	
› Face cutting geometry for plunging	
› Rake angle 30°	



Accessories	Article no.
Twist drill HSS with morse taper	
› 9-part; sizes 14.5/16/18/20/22/24/26/28/30 mm	
› Long service life	
› Good chip removal	
› Right handed	
MT 2	3051002
MT 3	3051003





Twist drill set	
› DIN 338 HSS-CO 5%	
› Tetrahedral 135° split point allows for excellent self-centring	
› Improved tool service life thanks to alloyed components	
› High speed/feed properties	
› Strong core design optimises the structural strength of the bit and minimises the risk of bit breakage	
› Practical OPTIMUM plastic case	
25-part	3201010
› 1 - 13 mm	
51-part	3201020
› 1 - 6 mm (in 0.1 mm increments)	
41-part	3201021
› 6 - 10 mm (in 0.1 mm increments)	



Edge sensor	3351171
› Rotating spindle	
› Shank 10 mm	
› Probe Ø 10 mm	



Accessories	Article no.
Precision quick release chuck	
Concentricity better than 0.06 mm	
1 - 8 mm; B16	3050608
1 - 10 mm; B16	3050610
1 - 16 mm; B18	3050630



Optimum Precision quick release chuck	
DKC 13 / 0-13 mm; B16 bis 4 800 rpm	3050632
DKC 16 / 0-16 mm; B16 to 4 000 rpm	3050633



OPTIMUM Direct quick release chuck	
MT 2 1 - 16 mm; up to 6 000 rpm	3050571
MT 2 1 - 13 mm; up to 8 000 rpm	3050572
MT 3 1 - 16 mm; up to 6 000 rpm	3050573
MT 4 1 - 16 mm; up to 6 000 rpm	3050574



Extension sleeves	
MT 2 - MT 3	3050667
MT 3 - MT 4	3050668

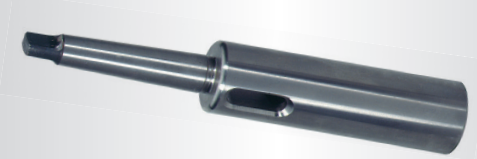

Reduction sleeve	
MT 3 - MT 2 / M12	3350313
MT 4 - MT 3 / M16	3350314

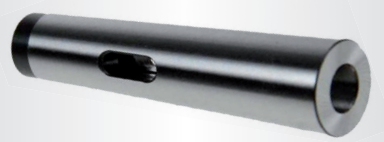

Accessories	Article no.
End mill arbour	
External taper **MT 2 / M10 / B16**	3050670
External taper **MT 3 / M12 / B16**	3350303
External taper **MT 4 / M16 / B16**	3350304

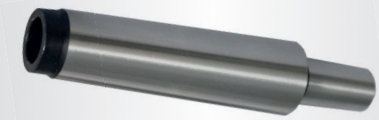

Drill chuck holder (arbour)	
External taper **ISO 30 / M12 / B16**	3352069
External taper **ISO 40 / M16 / B16**	3352070



Milling head holder SK50	3352066
› External taper Ø 27 mm DIN2080	

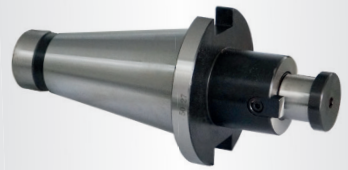

Morse cone SK 50	3352067
B18 DIN2080	

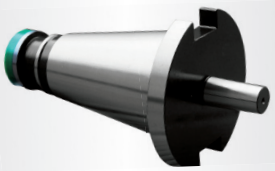

Holder for milling head MT 2	3352102
› External taper MT 2 / end mill holder Ø 16 mm	



Adapter	
ISO 30 / MT 3	3352068
BT 30 / MT 3	3536316



Accessories	Article no.

Copying and facing blade head

› Universally deployable for machining all steels and NF metals
› For facing and copying
› Made of special steel - highly quenched and tempered
› Excellent planarity and concentricity
› Milling body with asymmetrical division for extremely smooth action and uniform cutting
› Body and clamping shank form a unit for a short projection length and stable clamping
› No additional end mill mandrel used
› Special geometry for high-speed milling
› Economical because, in case of a blunt cutting edge, the plate can simply be rotated further (can be used up to twelve times)
› Indexable inserts Ø 10 mm
› Includes five turning plates RDET 1003 MOSN 8026
› Includes Torx TX15

Tool holder shank BT 20	3350202
Pull stud Optimum BT 20	3352726



› External Ø: 52 mm
› ISO designation RD X 1003 D52/R5

Tool holder shank BT 30	3350203
Pull stud BT 30	3536302



› External Ø: 52 mm
› ISO designation: RD X 1003 D52/R5

Tool holder shank BT 40	3350204
Pull stud BT 40	3536332



› External Ø: 63 mm
› ISO designation: RD X 1003 D63/R5

Tool holder shank ISO 30/DIN 2080	3350215
Tool holder shank ISO 40/DIN 2080	3350216



› External Ø:
52 mm (ISO30)
63 mm (ISO 40)
› ISO designation:
RD X 1003 D52/R5 (ISO 30)
RD X 1003 D63/R5 (ISO 40)

Tool holder shank MT 2/M10	3350212
Tool holder shank MT 3/M12	3350213
Tool holder shank MT 4/M16	3350214



› External Ø:
52 mm (MT 2/MT 3)
63 mm (MT 4)
› ISO designation:
RD X 1003 D52/R5 (MT 2/3)
RD X 1003 D63/R5 (MT 4)

HM turning plates

RDET 1003 MOSN8026	3350220



› 5 units
› Positive cutting geometry
› PVD coated
› For machining steel up to 900 N/mm², stainless steel, aluminium, non-ferrous metal, cast iron

RDHT 1003 MO-FA HF7	3350221



› 5 units
› Extremely positive cutting geometry
› Polished
› For machining AL alloys, copper alloys, plastics

Accessories	Article no.

Precision bore head set

ISO 30/ER32 - M12/BT 30	3352127
ISO 40/ER32 - M16/BT 40	3352128
ISO 50/ER32 - M24/BT 50	3352129



› 8 drill rods: BJ2008-32L/BJ2010-40L/BJ2014-53L/BJ2016-68L/BJ2020-83L/BJ2025-96L/BJ2030-115L/BJ20-L20-100L
Adjustment range 8 - 280 mm
Including drill rods, studs, circle extension, tools, case
› Without indexable inserts

Indexable insert set (10 units)



For steel	
For drill rod No. 1 - 4	3352136
For drill rod No. 5,6	3352137
For drill rod No. 7, 8	3352138
For aluminium	
For drill rod No. 1 - 4	3352141
For drill rod No. 5,6	3352142
For drill rod No. 7, 8	3352143

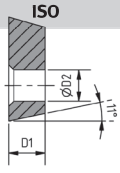

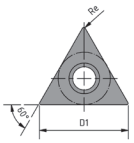

Article no.	ISO	D1	D2	S1	right
3352136	**TPGT110304L-FY-EH10**	11	3.4	3.18	0.4
3352141	**TBGT060104L-W-T1200A**	11	3.4	3.18	0.4
3352137	**TPGT090204L-FY-EH10**	9.6	2.8	2.38	0.4
3352142	**TPGT090204L-W-T1200A**	9.6	2.8	2.38	0.4
3352138	**TBGT060104L-W-H1**	6.9	2.2	1.59	0.4
3352143	**TBGT060104L-W-T1200A**	6.9	2.2	1.59	0.4

Cutting depth 0.2 - 0.6 - 1.0 mm, feed 0.05 - 0.15 - 0.25 mm, speed 100 - 250 - 400 mm

Bore head set

› For external and vertical machining
› Scope of delivery: bore head set, 9 units Drill rods with soldered on HSS plate, Allen key

Spindle seat **MT 3**	3352124
Spindle seat **MT 4**	3352125



Accessories	Article no.
Collet chuck set	
MT 2/ ER 25 - M10	3352052
› Collet chuck	
› 15 spring collets; sizes Ø 1.5 - Ø 16 mm/DIN ISO 15488	
› Hook wrench · Aluminium case	
MT 2/ ER 32 - M10	3352053
› Collet chuck	
› 18 spring collets; sizes Ø 2 - Ø 20 mm/DIN ISO 15488	
› Hook wrench · Aluminium case	
MT 3/ ER 32 - M12	3352093
› Collet chuck	
› 18 spring collets; sizes Ø 2 - Ø 20 mm/DIN ISO 15488	
› Hook wrench · Aluminium case	
MT 4/ ER 32 - M16	3352094
› Collet chuck	
› 18 spring collets; sizes Ø 2 - Ø 20 mm/DIN ISO 15488	
› Hook wrench · Aluminium case	
ISO 30/ER32 - M12/BT 30	3352054
› Collet chuck	
› 18 spring collets; sizes Ø 2 - Ø 20 mm/DIN ISO 15488	
› Pull stud M12/M12 and pull stud BT 30	
› Hook wrench · Aluminium case	
ISO 40/ER32 - M16/BT40	3352056
› Collet chuck	
› 18 spring collets; sizes Ø 2 - Ø 20 mm/DIN ISO 15488	
› Pull stud M16/M16 and pull stud BT 40	
› Hook wrench · Aluminium case	
ISO 50/ER32 - M24/BT50	3352065
› Collet chuck	
› 18 spring collets; sizes Ø 2 - Ø 20 mm/DIN ISO 15488	



Collet chuck ISO 30/ER25	3352046
› Hook wrench	



Accessories	Article no.
Spring collet ER32 (individual)	
Ø 6 mm	3441126
Ø 8 mm	3441128
Ø 10 mm	3441130
Ø 12 mm	3441132



Spring collet (individual)	
› MT 3 direct-clamping / M12	
Ø 4 mm	3352004
Ø 6 mm	3352006
Ø 8 mm	3352008
Ø 10 mm	3352010
Ø 12 mm	3352012
Ø 16 mm	3352013



Collet kit	
MT 2 direct-clamping / M10	3351980
› 5-part; sizes Ø4 / Ø6 / Ø8 / Ø10 / Ø12 mm	
MT 3 direct-clamping / M12	3352014
› 6-part; sizes Ø4 / Ø6 / Ø8 / Ø10 / Ø12 / Ø16 mm	



Collet kit	
ER 16	3440282
› 12 spring collets; sizes Ø 1 - 10 mm	
ER 25	3441109
› 15 spring collets; sizes Ø 1 - Ø 16 mm/DIN ISO 15488	
ER 32	3441122
› 18 spring collets; sizes Ø 3 - Ø 20 mm/DIN ISO 15488	



Accessories	Article no.
Assortment of clamping tools size	
› 58-part, in practical wall-mount holder	
› Metric thread	
› 24x pull studs	
› 6 units T-slot nuts	
› 6 units nuts	
› 4 units extension nuts	
› 6 units step blocks	
› 12 units step blocks	
Size 8	3352015
› T-slot nuts 10 mm; locking thread M 8	
Size 10	3352016
› T-slot nuts 12 mm; locking thread M10	
Size 12	3352017
› T-slot nuts 14 mm; locking thread M12	
Size 14	3352018
› T-slot nuts 16 mm; locking thread M 14	
Size 16	3352019
› T-slot nuts 18 mm; locking thread M16	

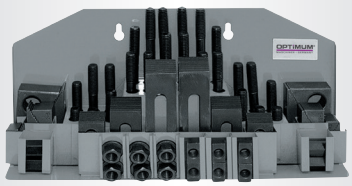

Size 12

Try square 90°	3385052
› For clamping in case of mechanical processing of workpieces, checking and scribing work	
› Precision: Parallelism and trueness 0.01 to 100 mm	
› Lateral reinforcing ribs	
› Dimensions L x W x H: 202 x 126 x 150 mm . Weight 7 kg	



Universal compressed air tool clamping system	
› Including tool clamp, cover cap, maintenance unit, gear rim, drawbar, control cabinet, operating element	
› High negative pressure achievable	
› Short change times through single-handed operation	
› Low eight thanks to optimised structure	
› Safe locking through toggle lever principle	
› Precise guiding thanks to optimised geometry	
› Low air consumption	
ISO 40	3352394
› For Optimill MF 2V / MF 4V	
Factory assembly clamping system	9000490


(Note: Adjustment work may be necessary if ordered without factory assembly).

Accessories	Article no.
Vibration damping machine base	
› Effective vibration and structure-borne noise insulation and noise reduction	
› Eliminates floor unevenness up to 5º	
› Fast and technically easy precision levelling by means of a regular threaded screw	
SE 55	3352981
› Jackscrew M12 x 1 x 150	
› Maximum load: 600 kg	
SE 85	3352982
› Jackscrew M16 x 1 x 150	
› Maximum load: 1 500 kg	

MADE IN GERMANY

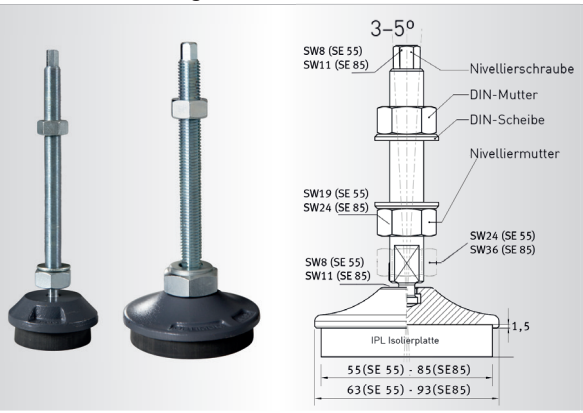

Precision machine shoe SEU1	3352985
› Patented double spindle bearing	
› With slip-protection plate at top	
› Maximum load 60 kN	
› Suitable for M16 threaded rod	
› Vibration-insulation plate for particularly loads. Good structure-borne noise insulation	
› Adjustment range +5 / -4 mm	
› High-precision, jerk-free levelling even of heavy machines	
› Installation time savings of up to 50 % thanks to precision levelling and freedom of installation.	
› Improves the dynamic behaviour of machines while reducing noise	
› Weight 3.7 kg	

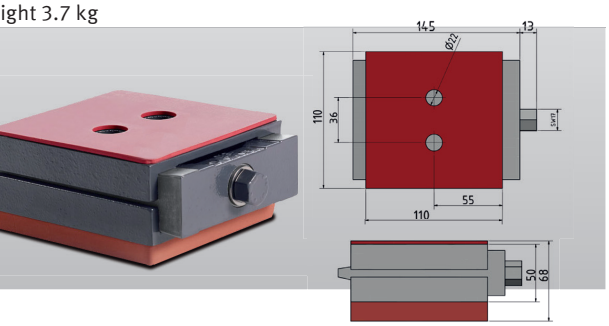

Levelling platen	
› The machines and equipment can be installed without anchors and precisely levelled using the height adjustment system.	
› non-slip rubberised	
SE 1	3381012
SE 2	3381016
SE 3	3381018



Load	SE 1	SE 2	SE 3
Milling machines	340 kg	460 kg	1 600 kg
gen. Machine	570 kg	1 460 kg	3 500 kg
Thread	M12	M16	M20
Base Ø/Base height	120/32	160/35	185/39

Accessories	Article no.
Universal milling table feed	
› **Emergency stop shutdown, no restart**	
› Continuous speed control and rapid motion *	
› Right-handed/left-handed rotation	
› Overload protection and limit stop switch	
› For self-assembly	
NEW **Milling table feed V 99S**	3352021
› Horizontal assembly	
› Motor: 90 W 230V ~50Hz	
Assembly kit MH 35V for the X-axis	3352035
Assembly kit MH 50V for the X-axis	3352036
NEW **Milling table feed V 250S**	3352030
› Vertical assembly	
› Motor: 130 W 230V ~50Hz	
Milling table feed V 250	3352025
› Motor: 130 W 110V ~50Hz	
› For the Y axis MF 2V / MF 4V	
› Includes assembly kit	



*only possible if the feed is integrated into the emergency stop circuit.

Workpiece support	
› Material S 45C	
WPS-1	3354261
WPS-2	3354262
WPS-3	3354263
WPS-4	3354264

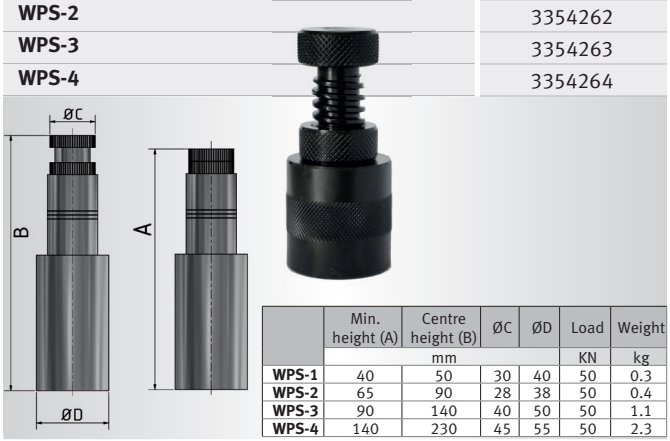

	Min. height (A)	Centre height (B)	ØC	ØD	Load	Weight
	mm				KN	kg
WPS-1	40	50	30	40	50	0.3
WPS-2	65	90	28	38	50	0.4
WPS-3	90	140	40	50	50	1.1
WPS-4	140	230	45	55	50	2.3

Prism WP 30	3352195
› Robust design for use on tool machines.	
› High-precision design	
› Adjustable from 0° to 60° and from 0° to -30°	
› Tempered and ground carbon steel	
› Precision trueness 0.005 mm	
› Angle tolerance 0.01°	
› Dimensions L x W x H: 75 x 25 x 32 mm	

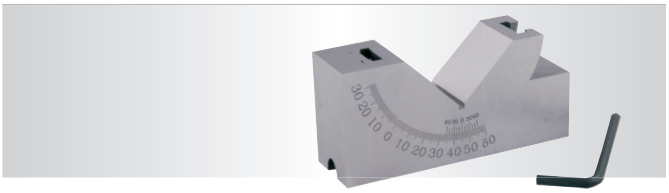

Accessories	Article no.
Cross tables KT	
› Coolant channel	
› Dovetail guide adjustable	
› Adjustable handwheel scaling with 0.05 mm scale	
KT 120	3356595
KT 179	3356596
KT 180	3356591
KT 210	3356600



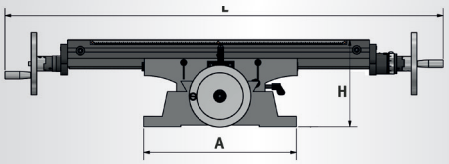

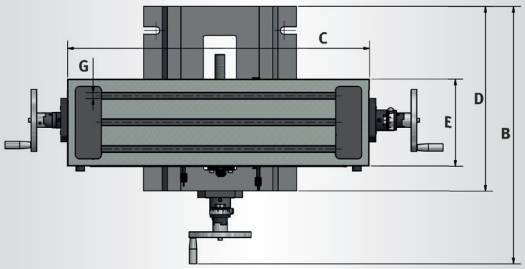

Technical data	KT 120	KT 179	KT 180	KT 210
A (Base width)	222 mm	274 mm	274 mm	370 mm
D (base length)	280 mm	340 mm	340 mm	445 mm
C (table length)	400 mm	500 mm	700 mm	730 mm
E (table width)	120 mm	180 mm	180 mm	210 mm
G (T-slot size)	10 mm	12 mm	12 mm	14 mm
L x W x H (mm)	506 x 400 x 140	748 x 483 x 155	948 x 483 x 155	1060 x 620 x 210
Weight	22 kg	46 kg	54 kg	84 kg
Travel				
X axis	220 mm	287 mm	480 mm	480 mm
Y axis	165 mm	167 mm	170 mm	210 mm
Max. load	40 kg	55 kg	55 kg	80 kg

Hold-down unit set of 2	
› Clamping height adjustable	
› Brass plate below the clamping arm protects material against damage	
Table groove **14 mm/M12**	3352031
› L x W x H: 115 x 42 x 39 mm Height adjustment: 0 - 89 mm	
Table groove **18 mm/M 16**	3352032
› L x W x H: 133 x 50 x 49 mm . Height adjustment: 0 - 101 mm	



Accessories	Article no.
T-slot nut (individual)	
M 8 / 10 mm	3353020
M 10 / 12 mm	3353022
M 12 / 14 mm	3353025
M 14 / 16 mm	3353026
M 16 / 18 mm	3353028



Universal coolant unit	3351999
› Connection 230V / 1 Ph	
› Max. delivery height 2.5 m / delivery rate 8 l/min	
› Tank content 11 l / dimensions L x W x H: 370 x 245 x 170 mm	
› Complete with tank, flexible tube, hose and switch/plug combination	
› Magnetic base fastener for coolant hose	



Parallel shim set 18-part	3536191
› For precision work for parallel mounting of workpieces in machines, vices on scoring boards or tool machines	
› Finely polished to 0.01 mm precision	
› Length 150 mm x width 8.5 mm	
› 2 units each: 14 mm; 16 mm; 20 mm; 24 mm; 30 mm; 32 mm; 36 mm; 40 mm; 44 mm	



Parallel shim set 20-part	3354001
› For precision work for parallel mounting of workpieces in machines, vices on scoring boards or tool machines	
› Finely polished to 0.01 mm precision	
› Thickness 3 mm	
› Length	150 mm
› 2 units each: 8 mm; 13 mm; 16 mm; 19 mm; 22 mm; 25 mm; 31 mm; 35 mm; 38 mm; 41 mm	



Accessories	Article no.
Thread tapping device M5 - M12/B16	3352042
› Quick reverse built-in, immediately effective on changing the feed direction	
› Slip clutch 4-stage adjustable.	
Scope of delivery:	
› Two flexible spring collets	
› Two open-ended spanners	
› Hand grip	
› Allen key	



Technical data	
Self-release path	4 mm
Freewheel	1.5 mm
Length compensation tensioned	8.5 mm
Max. speed	1 000 rpm
Transmission ratio forward and reverse	1 : 1.75
Cutting range	M5 - M12
Clamping range	3.5 - 10
Length	B16 DIN 238
Length compensation compressed	156 mm
Shank holder	5 mm

AQUACUT C1	3530030
10 litre cannister	
For mixing emulsions	
Drilling and cooling emulsion	
High-pressure resistant and containing mineral oil, for long tool life and clean surfaces	
Emulsifiable with water, microbe-resistant and kind to the skin	



Coolant hose KMS 2	3356660
› Two flexible and stable coolant hoses made of individual plastic elements	
› Not electrically conductive	
› Magnetic base holding force up to 50 kg	
› Length of coolant hoses each 335 mm	
› Insensitive to most solvents and chemicals	
› Universally deployable on all tool machines	

Coolant mist lubricator MMC1	3356663
› Magnetic base with a holding force of 75 kg	
› Base size L x W x H: 62 x 50 x 55 mm	
› Screw connection for external compressed air supply	
› Flexible and stable hose with a length of 500 mm	



KMS 2



MMC1

Accessories	Article no.
Universal machine substructure MSM 1 and chip tray	
› for milling machine models BF16 / MH20 / MH22	
› Chassis dimensions 420 x 340 x 800 mm	
› Chip tray dimensions 720 x 470 x 30 mm	
› Chassis net weight 28 kg	
Universal machine substructure MSM 1	3353000
Chip tray	3352999

Dimensions

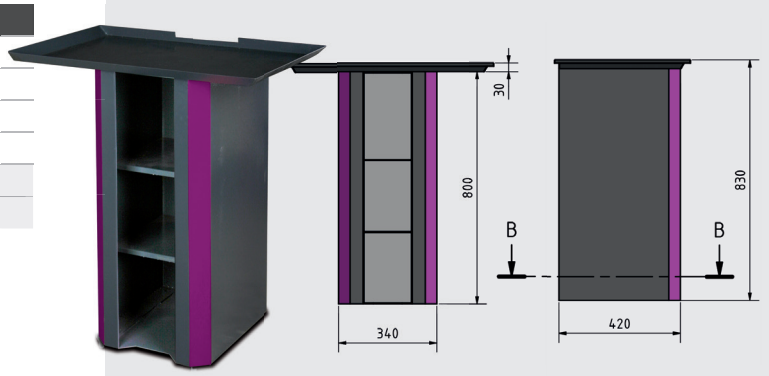

Machine mobile base MSM 2	3353009
› For milling machine models MH 25V / MH 25SV	
› Solid design and weight ensure stability	
› Net weight 51 kg	
› Dimensions 500 x 700 x 750 mm	

Dimensions

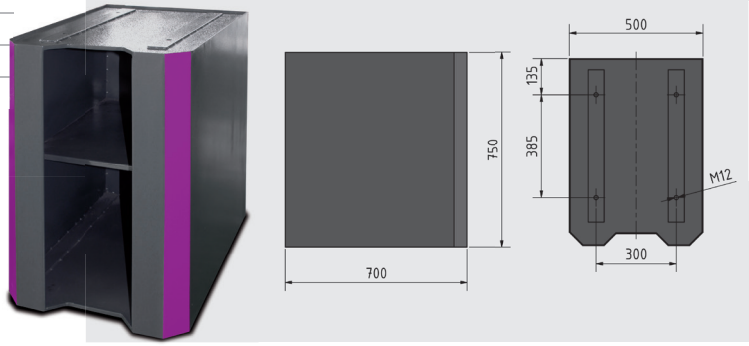

Machine mobile base MSM 3	3353014
› for milling machine models MH 35G / MH 35V / MB 4	
› Solid design and weight ensure stability	
› Net weight 86.5 kg	
› Dimensions 680 x 570 x 910 mm	

The rear mounting holes must be drilled by the customer

Dimensions

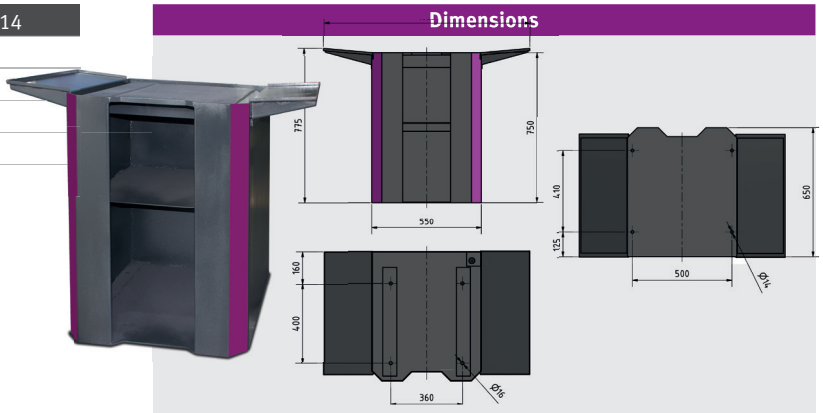

Machine mobile base MSM 4	3353015
› For milling machine MH 50G / MH 50V	
› Solid design and weight ensure stability	
› Net weight 134 kg	
› Dimensions 650 x 550 x 750 mm	

Dimensions

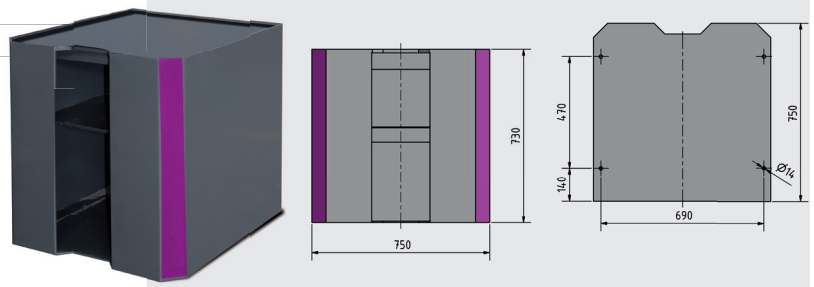

Accessories	Article no.
Starter set BT 20	3353281
Comprises:	
1 unit milling head holder Ø 16 mm	
2 units Weldon holder Ø 6 mm	
2 units Weldon holder Ø 8 mm	
1 unit Weldon holder Ø 10 mm	
1 unit Weldon holder Ø 12 mm	
1 unit tool fitting BT20/B16	
11 units pull studs	
1 unit quick-release drill chuck 1 - 13 mm	
1 unit facing and copying blade head	
2 units collet chuck ER 25	
1 unit spring collet spanner ER 25	
12-part Collet kit ER 25	

Milling head holder 3352728



› Collet Ø 16 mm

Weldon holder

Ø 6 mm	3352732
Ø 8 mm	3352734
Ø 10 mm	3352736
Ø 12 mm	3352738



Tool holder 3352727



› BT 20/B16

Spring collet holder spanner

ER 16	3352742



ER 25	3352745



Accessories	Article no.
Optimum Precision quick release chuck	
DKC 13 / 0-13 mm; B16 bis 4 800 rpm	3050632
DKC 16 / 0-16 mm; B16 to 4 000 rpm	3050633



Copying and facing blade head 3350202



› Universally deployable for machining all steels and NF metals
› For facing and copying
› Made of special steel - highly quenched and tempered
› Excellent planarity and concentricity
› Includes Torx TX15
› Outer diameter 52 mm
› ISO: RD X 1003 D52/R5

Assembly and tool adjustment gauge 3352731



› For easy and precise adjustment of tools
› Vertical and horizontal collet for tools with a steep-angle taper

Collet chuck

ER 16	3352741
ER 25	3352744



Pull stud Optimum 3352726



› Optimum custom build (no standard BT 20 bolts)

Collet chuck set

ER 16, 12-part Ø 1-10 mm	3440282
ER 25, 15-part Ø 1-16 mm	3441109



Accessories	Article no.
Starter set BT 30	3353282
Comprises:	
1 unit milling head holder Ø 22 mm	
1 unit chuck 1 - 13 mm	
2 units Weldon 6 mm	
1 unit Weldon 8 mm	
1 unit Weldon 10 mm	
1 unit Weldon 12 mm	
1 unit Weldon 16 mm	
2 units Weldon 20 mm	
1 unit adapter BT 30 to MT 2	
4 units spring collet holder ER 32	
1 unit spring collet spanner ER 32	
18-part Collet kit ER 32	
1 unit height adjuster	
1 unit assembly and tool adjustment gauge	
14x pull studs	
1 unit taper squeegee	

Milling head holder 3353306



› Collet Ø 22 mm

Chuck 3536303



› Clamping range 1.5 - 16 mm

Weldon holder	
Ø 6 mm	3353310
Ø 8 mm	3353311
Ø 10 mm	3353312
Ø 12 mm	3353313
Ø 16 mm	3353314
Ø 20 mm	3353315



Adapter	
Ø BT 30 to MT 2	3353305
Ø BT 30 to MT 3	3536316

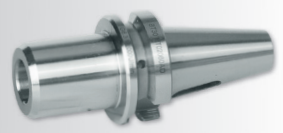

Accessories	Article no.
Spring collet holder ER 32	3353304



Chuck adapter BT 30 - B16 3353308



Spring collet holder spanner ER 32 3353307



Height-adjuster 3536290



› Analogue version
› For fast and easy determination of the reference point on the Z axis and/or for adjusting tools "to zero" (e.g., for milling or drilling) without damaging the workpiece
› Housing height 50 mm

Assembly and tool adjustment gauge 3536193



› For easy and precise adjustment of tools
› Vertical and horizontal collet for tools with a steep-angle taper

Taper squeegee 3353301



Pull stud

BT 30 3353302



DIN 2080 M12/M12 3536177



Collet kit ER 32 3441122



Accessories	Article no.
Starter set BT 40	3353284
Comprises:	
1 unit milling head holder Ø 27 mm	
1 unit chuck 1 - 13 mm	
2 units Weldon 6 mm	
1 unit Weldon 8 mm	
1 unit Weldon 10 mm	
1 unit Weldon 12 mm	
1 unit Weldon 16 mm	
2 units Weldon 20 mm	
1 unit adapter BT 40 to MT 3	
4 units spring collet holder ER 32	
1 unit spring collet spanner ER 32	
18-part Collet kit ER 32	
1 unit height adjuster	
1 unit assembly and tool adjustment gauge	
14x pull studs	
1 unit taper squeegee	

Milling head holder 3353336



› Collet Ø 27 mm

Chuck 3536333



› Clamping range 1.5 - 16 mm

Weldon holder	
Ø 6 mm	3353340
Ø 8 mm	3353341
Ø 10 mm	3353342
Ø 12 mm	3353343
Ø 16 mm	3353344
Ø 20 mm	3353345



Adapter 3353335

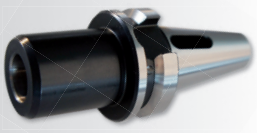

› BT 40 to MT 3

Holder BT 40/B16 3353338



Accessories	Article no.
Spring collet holder ER 32	3353334



Spring collet holder spanner ER 32 3353307



Height-adjuster 3536290



› Analogue version
› For fast and easy determination of the reference point on the Z axis and/or for adjusting tools "to zero" (e.g., for milling or drilling) without damaging the workpiece
› Housing height 50 mm

Assembly and tool adjustment gauge 3536194



› For easy and precise adjustment of tools
› Vertical and horizontal collet for tools with a steep-angle taper

Taper squeegee 3353331



Pull stud

BT 40 3353332



DIN 2080 M16/M16 3536179



Collet kit ER 32 3441122







CNC Catalogue

To support any conceivable metalworking application, we have composed an assortment in our OPTIMUM CNC Catalogue that covers many areas with suitable machines.
Request our free CNC catalogue, or download the catalogue from: www.optimum-maschinen.de

DISCOVER OUR PRODUCT VIDEOS NOW!

YouTube | Optimum Machines

Are you familiar with our YouTube channel, **Optimum Machines**?

You can view all of our product videos here. We always seek to offer you a **wide range** and **high quality selection** of videos.

Subscribe to our YouTube channel, to avoid missing any of the new videos:
www.youtube.com/user/OptimumMaschinen

BENCH LATHES



Visit our exhibition in Hallstadt/Bamberg

LATHES

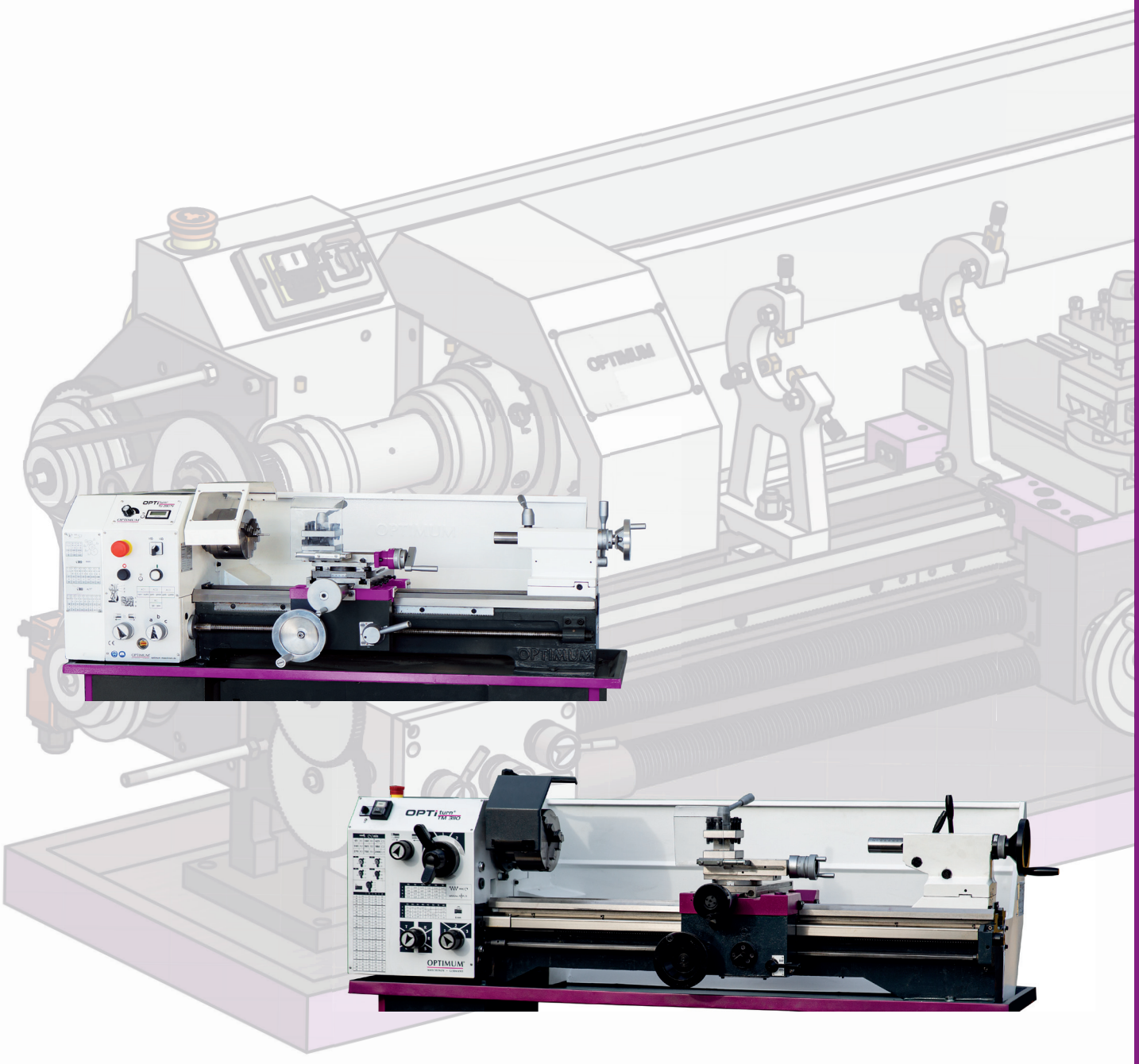

The small-scale lathe with electronically controllable speed

DIY

BELT

VARIO

Facts that impress in terms of quality, performance and price

- Direct current motor
- Low-voltage electronics
- Ribbed grey cast prism bed, induction tempered and ground
- Tempered and polished z-axis guideway
- Hand wheels with adjustable fine scaling 0.04 / 0.01 mm
- Guaranteed concentricity of spindle nose better than 0.015 mm
- Chuck concentricity max. 0.05 mm
- Leading spindle for thread tapping or automatic longitudinal turning
- Longitudinal, cross and top slides
- Clockwise/Anti-clockwise rotation switchable via control panel
- Sturdy metal handwheels
- Automatic longitudinal/leading spindle drive
- Fast and easy speed change through V-belt
- Safety switch in cover
- All guides adjustable without play using cleats
- Emergency stop button
- Chuck protection with microswitch
- Three-jaw lathe chuck included in standard scope of delivery
- Large thread tapping area thanks to interchangeable gear set included in standard scope of delivery
- EMC filter class C1



Model	TU 1503V
Article no.	3420260
Output	
Electrical connection	230 V / 1 Ph ~50 Hz
Drive motor S6-60% operation	450 W
Spindle	
Spindle taper	MT1
Spindle bore	Ø 11 mm
Spindle holder	cylindrical Ø 22 mm
Dual tool holder chuck height	12 mm
Work areas	
Centre height	75 mm
Centre width	265 mm
Swing diameter over machine bed*	150 mm*
Bed width	70 mm
Speed range	120 - 3 000 rpm
Number of speeds	Electronic speed control
Travel	
Top slide travel	40 mm
Cross slide travel	55 mm
Feed and pitch	
Longitudinal feed within the range	0.05 - 0.1 mm/rev (2 feeds)
Metric pitch	0.5 - 1.5 mm/rev (8 pitches)
Tailstock	
Tailstock seat	MT1 short
Tailstock - quill stroke	30 mm
Dimensions L x W x H	570 x 340 x 300 mm
Net weight	23 kg

Contents of package
› Three-jaw lathe chuck Ø 80 mm, centre clamping
› Non-travelling centre MT1
› Dual tool holder 12 mm
› Splashguard
› Chip tray
› Interchangeable gear set
› Operating tool

Lathe chuck	Article no.
Three-jaw lathe chuck Ø 80 mm, single clamping	3440287
Four-jaw lathe chuck Ø 80 mm, individual clamping	3440286
Four-jaw lathe chuck Ø 80 mm, centre clamping	3442808
› Information on lathe chucks from page 218	

Accessories	Article no.
Lathe tool set 8 mm, 5-part	3441662
Lathe tool set 8 mm, 11-part	3441601
› For information on lathe tool sets see on page 223	
Follow rest passageway max. Ø 45 mm	3440210
Steady rest passageway max. Ø 40 mm	3440211
Travelling centre MT1	3440700
Collet chuck ER 16, Ø 22 mm, cylindrical	3440281
Collet kit ER 16, 1 - 10 mm	3440282
› More accessories for lathes from page 214	

*The lathe (frequency converter) complies with the DIN EN 55011 standard: class C1 - note on „Operation of machines with frequency converters“ on page 323

DIY

BELT

VARIO

Modelbuilding lathe with electronic speed control and digital speed display

- Precision workmanship
- Ribbed cast steel prism bed with strong ribbing, induction tempered and precision ground
- Tempered and polished z-axis guideway
- Tempered spindle nose (DIN 6350)
- Guaranteed concentricity of spindle nose better than 0.009 mm
- Automatic longitudinal/leading spindle drive
- Roll-milled trapezoidal thread on lead spindle
- Thrust bearings
- Leading spindle borne on two sintered bearings
- Longitudinal, cross and top slides
- Clockwise/Anti-clockwise rotation switchable via control panel
- Tempered main spindle borne on adjustable precision taper roller bearings
- Tapered roller bearings in P5 quality
- Cylindrical centring mount
- Tempered spindle nose with Ø 21 mm spindle bore
- Tailstock adjustable for turning spheres
- Tailstock spindle sleeve and handwheel with adjustable fine scaling 0.02 mm; fast, easy adjustment without tools thanks to clamping lever
- Gearbox with interchangeable gearwheels
- Emergency stop button
- Quadruple tool holder, rotating
- Lathe chuck concentricity better than 0.04 mm
- Chuck protection with microswitch
- Three-jaw lathe chuck included in standard scope of delivery
- Interchangeable gear set as standard enables large thread tapping area
- EMC filter class C1

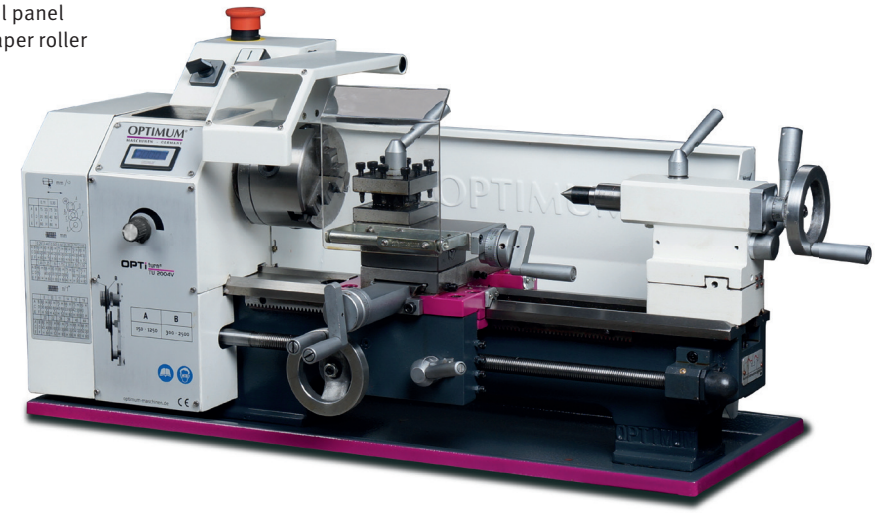

Model	TU 2004V
Article no.	3420310
Output	
Electrical connection	230 V / 1 Ph ~50 Hz
Drive motor	600 W
Spindle	
Spindle taper	MT3
Spindle bore	Ø 21 mm
Spindle holder	cylindrical Ø 72 mm
Passageway three-jaw chuck	Ø 20 mm
Quadruple tool holder mounting height	12 mm
Work areas	
Centre height	100 mm
Centre width	300 mm
Swing diameter over machine bed*	200 mm*
Swing over cross slide	110 mm
Bed width	100 mm
Speed range	150 - 2 500 rpm
Number of speeds	2-speed, electronic speed control
Travel	
Top slide travel	55 mm
Cross slide travel	75 mm
Feed and pitches	
Longitudinal feed within the range	0.1 - 0.2 mm/rev (2 feeds)
Pitch - metric in range	0.25 - 3 mm/rev (14 pitch)
Pitch - inch in range	44 - 8 turns/inch (12 pitches)
Tailstock	
Tailstock seat	MT2
Tailstock - quill stroke	65 mm
Dimensions L x H x W	830 x 425 x 360 mm
Net weight	65 kg

Contents of package
› Three-jaw lathe chuck Ø 100 mm, centre clamping
› Two fixed centres MT2 and MT3
› Quadruplicate tool holder 12 mm
› Splashguard
› Chip tray
› Interchangeable gear set
› Operating tool

Lathe chuck	Article no.
Four-jaw lathe chuck Ø 100 mm centric (chuck flange 3440312 is required)	3442810
Four-jaw lathe chuck Ø 100 mm, single (Chuck flange 3440312 required)	3442872
Chuck flange for lathe chuck Ø 100 mm (3442810/3442872)	3440312
Clamping disc Ø 170 mm	3440295
› Information on lathe chucks from page 218	

Accessories	Article no.
Quick change tool holder SWH-AA	3384311
Factory assembly SWH-AA	9000401
Spare tool holder 12 x 50 Type D for square	3384312
Spare tool holder 12 x 50 type H for round chisels	3384320
Lathe tool set 10 mm, 11-part	3441602
Lathe tool set 10 mm, 5-part	3441664
› For information on lathe tool sets see on page 223	
Follow rest passageway max. Ø 40 mm	3440230
Steady rest passageway max. Ø 50 mm	3440231
Collet chuck ER 25 Ø 72 mm	3440305
› More accessories for lathes from page 214	

*The lathe (frequency converter) complies with the DIN EN 55011 standard: class C1 - note on „Operation of machines with frequency converters“ on page 323

Lathes for DIY.

TU 2304V with electronic speed control

Facts that impress in terms of quality, performance and price

- Precision workmanship
- Tempered and polished z-axis guideway
- Guaranteed concentricity of spindle nose better than 0.009 mm
- Roll-milled trapezoidal spindles
- Thrust bearings
- Leading spindle borne on two sintered bearings
- All guides adjustable using cleats
- Precision slide
- Hand wheels with adjustable fine scaling 0.04 / 0.01 mm
- Leading spindle for thread tapping or automatic longitudinal turning
- Clockwise/Anti-clockwise rotation switchable via control panel
- Tailstock adjustable ± 5 mm for turning spheres
- Tailstock spindle sleeve and handwheel with adjustable fine scaling 0.02 mm
- Fast, easy adjustment of tailstock without tools thanks to clamping lever
- Emergency stop button
- Quadruple tool holder
- Chuck concentricity better than 0.05 mm
- Chuck protection
- Three-jaw lathe chuck included in standard scope of delivery
- Interchangeable gear set for thread tapping in standard scope of delivery
- Comprehensive accessories
- Lasting value

TU 2304 V

- High-torque motor with constant torque curve to a great extent
- Speed change easily adjustable via potentiometer
- Digital speed display
- EMC filter class C1

Machine bed



› Grey cast iron prism bed with strong ribbing, aged for at least six months, induction tempered and precision ground

Digital speed display



› TU 2304V: with electronically adjustable 2-stage spindle speed 150 - 2 200 rpm



Accessories
Machine chassis MST1
Article no. 3440409

Fig. similar: TU 2304V with optional machine chassis

Technical specifications, accessories and dimensions

BELT VARIO

Model	TU 2304	TU 2304V**
Article no.	3420320	3420325
Output		
Electrical connection	230 V / 1 Ph ~50 Hz	
Drive motor	750 W	
Spindle		
Spindle taper	MT3	
Spindle holder	cylindrical Ø 72 mm	
Spindle bore, bar passage diameter	Ø 20 mm	
Quadruple tool holder mounting height	14 mm	
Work area		
Centre height	115 mm	
Centre width	450 mm	
Swing diameter over machine bed*	230 mm	
Swing over cross slide	128 mm	
Bed width	133 mm	
Speed range		
Spindle speed	125 - 2 000 rpm	150 - 2 200 rpm
Number of speeds	6 speeds	2 speeds, electronically controlled
Travel		
Top slide travel	75 mm	
Cross slide travel	120 mm	
Pitches		
Pitch - metric in range	0.4 - 3.5 mm/rev (14 pitches)	
Pitch - inch in range	44 - 8 turns/inch (14 pitches)	
Tailstock		
Tailstock seat	MT2	
Tailstock - quill stroke	70 mm	
Dimensions and weight		
Length x width x height	965 x 585 x 510 mm	
Net weight	111 kg	114 kg

Dimensions

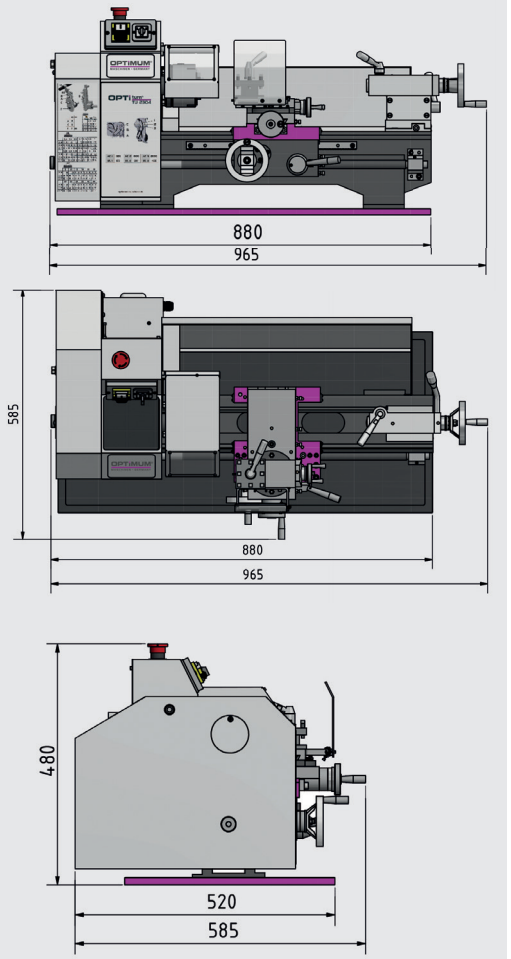

Lathe chucks and accessories	Article no.
Three-jaw lathe chuck Ø 125 mm, centre clamping (Chuck flange 3440313 required)	3442712
Four-jaw lathe chuck Ø 125 mm, centre clamping (Chuck flange 3440313 required)	3442812
Four-jaw lathe chuck Ø 125 mm, individual clamping (Chuck flange 3440313 required)	3442874
Chuck flange for lathe chuck Ø 125 mm	3440313
› Information on lathe chucks from page 218	

Accessories	Article no.
Quick change tool holder SWH 1-A	3384301
Factory assembly SWH 1-A	9000401
Spare tool holder 20 x 90 type D for square chisels	3384302
Spare tool holder 20 x 85 type H for round chisels	3384321
Lathe tool set 10 mm, 11-part	3441602
Lathe tool set 12 mm, 11-part	3441603
Lathe tool set 12 mm, 5-part "Made in Germany"	3441212
› For information on lathe tool sets see on page 223	
Steady rest passageway max. Ø 55 mm	3440361
Follow rest passageway max. Ø 34 mm	3440360
Travelling centre MT2	3440702
Clamping disc Ø 170 mm	3440295
Machine chassis MST1	3440409
Levelling platen SE 1 (if the MST1 chassis is used, 6 units are required)	3381012
› More accessories for lathes from page 214	

Contents of package
› Three-jaw lathe chuck Ø 100 mm, centric
› Fixed centres MT2 and MT3
› Quadruplicate tool holder 14 mm
› Splashguard
› Chip tray
› Interchangeable gear set
› Operating tool

Accessories	Article no.
	
Digital position display DRO 5 incl. 3 magnetic sensors	3383975
Magnetic strip length 1 100 mm	3383978
Factory assembly	9000420
› Info on the position display on page 231	

*The lathe (frequency converter) complies with the DIN EN 55011 standard: class C1 - note on operation „Operation of machines with frequency converters“ on page 323

Lathes for DIY.

TU 2406V with electronic speed control

Facts that impress in terms of quality, performance and price

- Precision workmanship
- Tempered and polished z-axis guideway
- Guaranteed concentricity of spindle nose better than 0.009 mm
- Roll-milled trapezoidal spindles
- Thrust bearings
- Leading spindle borne on two sintered bearings
- All guides adjustable using cleats
- Two tapered roller bearings in P5 quality
- Precision slide
- Hand wheels with adjustable fine scaling 0.04 / 0.01 mm
- Chuck concentricity better than 0.05 mm
- Leading spindle for thread tapping or automatic longitudinal turning
- Clockwise/Anti-clockwise rotation switchable via control panel
- Tailstock adjustable ± 5 mm for turning spheres
- Tailstock spindle sleeve and handwheel with adjustable fine scaling 0.02 mm
- Fast, easy adjustment of the tailstock without tools thanks to clamping lever
- Emergency stop button
- Quadruple tool holder
- Interchangeable gears in standard scope of delivery
- Three-jaw lathe chuck included in standard scope of delivery
- Comprehensive accessories
- Lasting value

TU 2406 V

- High-torque motor with constant torque curve to a great extent
- Speed change easily adjustable via potentiometer
- Digital speed display
- EMC filter class C1

Machine bed



› induction tempered and polished

Digital speed display



› TU 2304V: with electronically adjustable 2-stage spindle speed 150 - 2 500 rpm

Accessories
Machine chassis MST1
Article no. 3440409

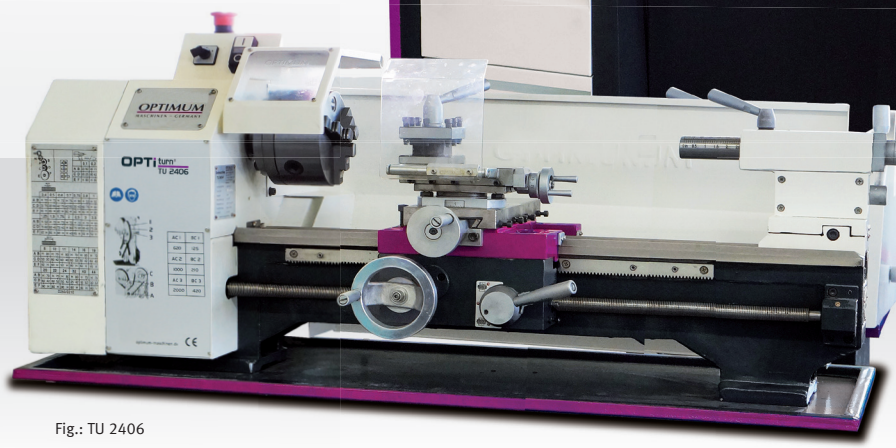

Fig.: TU 2406

Fig.: TU 2406V with optional machine chassis

Technical specifications, accessories and dimensions

BELT VARIO

Model	TU 2406	TU 2406V**
Article no. (230 V)	3420350	3420355
Article no. (400 V)	3420353	-
Output		
Electrical connection	230 V / 1 Ph ~50 Hz 400 V / 3 Ph ~50 Hz	230 V / 1 Ph ~50 Hz
Drive motor	750 W	1.1 kW
Spindle		
Spindle taper	MT3	
Spindle holder	cylindrical Ø 52 mm	
Spindle bore, bar passage diameter	Ø 21 mm	
Quadruple tool holder mounting height	14 mm	
Work area		
Centre height	125 mm	
Centre width	550 mm	
Swing diameter over machine bed*	250 mm	
Swing over cross slide	148 mm	
Bed width	133 mm	
Speed range		
Spindle speed	125 - 2 000 rpm	150 - 2 500 rpm
Number of speeds	6 speeds	2-speed, electronic speed control
Travel		
Top slide travel	75 mm	
Cross slide travel	120 mm	
Pitches		
Pitch - metric in range	0.4 - 3.5 mm/rev (14 pitches)	
Pitch - inch in range	44 - 10 turns/inch (12 pitches)	
Tailstock		
Tailstock seat	MT2	
Tailstock - quill stroke	70 mm	
Dimensions and weight		
Length x width x height	1 090 x 594 x 484 mm	
Net weight	127 kg	125 kg

Dimensions

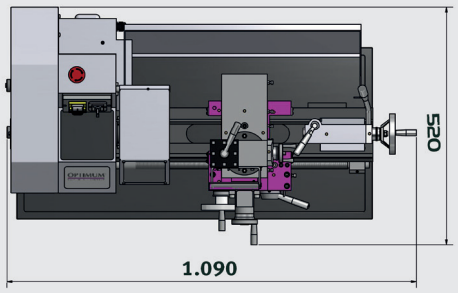

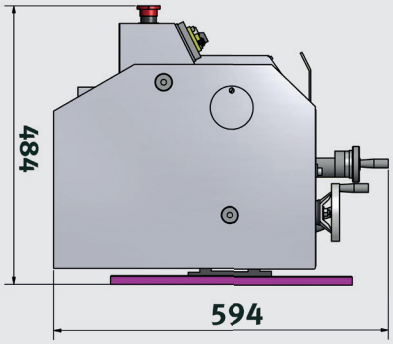

Lathe chucks and accessories	Article no.
Four-jaw lathe chuck Ø 125 mm, centre clamping (Chuck flange 3440511 required)	3442812
Four-jaw lathe chuck Ø 125 mm, individual clamping (Chuck flange 3440511 required)	3442874
Chuck flange lathe chuck Ø 125 mm (lathe chuck 3442812/3442874)	3440511
Clamping disc Ø 240 mm	3440552
› Information on lathe chucks from page 218	

Contents of package
› Three-jaw lathe chuck Ø 125 mm, centre clamping
› Two fixed centres MT2 and MT3
› Quadruplicate tool holder 14 mm
› Splashguard
› Chip tray
› Interchangeable gear set
› Operating tool

Accessories	Article no.
Quick change tool holder SWH 1-A	3384301
Factory assembly SWH 1-A	9000401
Spare tool holder 20 x 90 type D for square chisels	3384302
Spare tool holder 20 x 85 type H for round chisels	3384321
Lathe tool set 10 mm, 11-part	3441602
Lathe tool set 12 mm, 11-part	3441603
Lathe tool set 12 mm, 5-part	3441666
Lathe tool set 12 mm, 5-part "Made in Germany"	3441212
› For information on lathe tool sets see on page 223	
Steady rest passageway max. Ø 50 mm	3441315
Follow rest passageway max. Ø 34 mm	3441310
Collet chuck ER 32, short taper	3440506
Machine chassis MST1	3440409
Levelling platen SE 1 (if the MST1 chassis is used, 6 units are required)	3381012
› More accessories for lathes from page 214	

Accessories	Article no.
	
Digital position display DRO 5 incl. 3 magnetic sensors	3383975
Magnetic strip length 1 100 mm	3383978
Factory assembly	9000420
› Info on the position display on page 231	

*The lathe (frequency converter) complies with the DIN EN 55011 standard: class C1 - note on „Operation of machines with frequency converters“ on page 323

Leading spindle lathes with feed gear for demanding users.

TU 2506V with brushless motor for continuously variable speed control

Facts that impress in terms of quality, performance and price

- Precision workmanship
- Powerful motor, low-maintenance motor
- Ribbed grey cast steel prism bed with strong ribbing, induction tempered and precision ground
- Tempered and polished z-axis guideway
- Guaranteed concentricity of spindle nose better than 0.009 mm
- Automatic longitudinal/leading spindle drive
- Roll-milled trapezoidal spindles
- Thrust bearings
- Leading spindle borne on two sintered bearings
- Chip guard on top slide
- Top slide displaceable on cross slide
- Leading spindle for thread tapping or automatic longitudinal turning
- All guides adjustable using cleats
- Clockwise/Anti-clockwise rotation switchable via control panel
- Tempered main spindle borne on adjustable, precision taper roller bearings
- Tapered roller bearings in P5 quality
- Handwheels on slide with adjustable fine scaling 0.04 / 0.01 mm
- Tempered spindle nose with Ø 26 mm spindle bore
- Tailstock adjustable ± 5 mm for turning spheres
- Tailstock spindle sleeve and handwheel with adjustable fine scaling 0.02 mm
- Fast, easy adjustment of the tailstock without tools thanks to clamping lever
- Emergency stop button
- Quadruple tool holder
- Concentricity at chuck better than 0.04 mm
- Three-jaw lathe chuck included in standard scope of delivery
- Interchangeable gears in standard scope of delivery for thread tapping
- Fully equipped; the user can immediately start productive work after commissioning

TU 2506 V

- Smooth action, powerful, brushless DC drive with excellent control characteristics
- High-precision steel chuck for higher speeds
- Speed change easily adjustable via potentiometer
- Digital speed display

TU 2506V
Powerful brushless drive



› Particularly smooth action
› Virtually constant torque over the entire speed range
› Extremely powerful

Accessories
Machine chassis MST1
Article no. 3440409



Fig.: TU 2506V with optional accessories MST 1

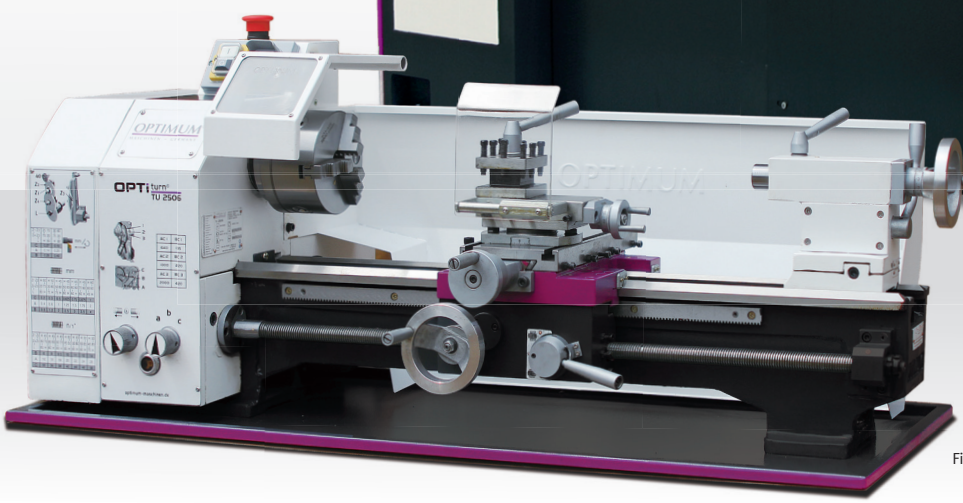

Fig.: TU 2506

Technical specifications, accessories and dimensions

BELT VARIO

Model	TU 2506	TU 2506V*
Article no. (230 V)	3425001	3425006
Article no. (400 V)	3425003	-
Output		
Electrical connection	230 V / 1 Ph ~50 Hz 400 V / 3 Ph ~50 Hz	230 V / 1 Ph ~50 Hz
Drive motor	750 W	1.5 kW
Spindle		
Spindle taper	MT4	
Spindle holder	Short taper	
Spindle bore, bar passage diameter	Ø 26 mm	
Quadruple tool holder mounting height	max. 13 mm	
Work area		
Centre height	125 mm	
Centre width	550 mm	
Swing diameter over machine bed*	246 mm	
Swing over cross slide	149 mm	
Bed width	134 mm	
Speed range		
Spindle speed	125 - 2 000 rpm	30 - 4 000 rpm
Number of speeds	6 speeds	4 speeds, electronically controlled
Travel		
Top slide travel	70 mm	
Cross slide travel	110 mm	
Feeds and pitches		
Longitudinal feed within the range	0.07 - 0.4 mm/rev (6 feed rates)	
Pitch - metric in range	0.2 - 4 mm/rev (21 pitches)	
Pitch - inch in range	56 - 8 turns/inch (21 pitches)	
Tailstock		
Tailstock seat	MT2	
Tailstock- sleeve diameter/sleeve travel	30 mm / 65 mm	
Dimensions and weight		
Length x width x height	1 250 x 585 x 475 mm	1 250 x 650 x 420 mm
Net weight	138 kg	132 kg

Dimensions

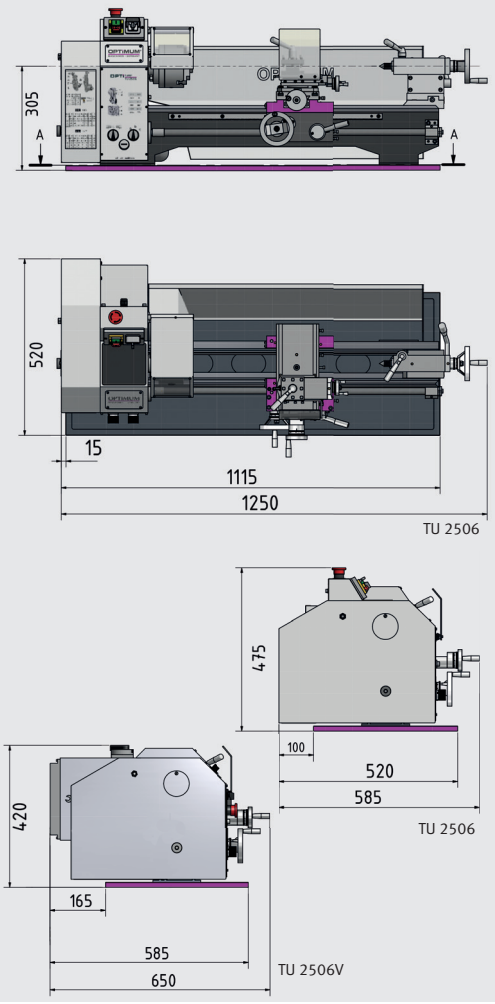

Lathe chucks and accessories	Article no.
Four-jaw lathe chuck Ø 125 mm, individual clamping (Chuck flange 3441312 required)	3442874
Four-jaw lathe chuck Ø 125 mm, centre clamping (Chuck flange 3441312 required)	3442812
Chuck flange lathe chuck Ø 125 mm (lathe chuck 3442874/3442812)	3441312
Planar clamping disc Ø 240 mm	3441352
› Information on lathe chucks from page 218	

Accessories	Article no.
Quick change tool holder SWH 1-A	3384301
Factory assembly SWH 1-A	9000401
Spare tool holder 20 x 90 type D for square chisels	3384302
Spare tool holder 20 x 85 type H for round chisels	3384321
Lathe tool set 10 mm, 11-part	3441602
Lathe tool set 12 mm, 11-part	3441603
Lathe tool set 12 mm, 5-part "Made in Germany"	3441212
› For information on lathe tool sets see on page 223	
Steady rest passageway max. Ø 50 mm	3441315
Follow rest passageway max. Ø 34 mm	3441310
Collet kit ER 32, 3 - 20 mm	3441122
Collet chuck ER 32, short taper	3441306
Machine chassis MST1	3440409
Levelling platen SE 1 (if the MST1 chassis is used, 6 units are required)	3381012
› More accessories for lathes from page 214	

Contents of package

- › Three-jaw lathe chuck Ø 125 mm, centre clamping
- › Two fixed centres MT2 and MT4
- › Quadruplicate tool holder 13 mm
- › HSS lathe tools
- › Splashguard
- › Chip tray
- › Interchangeable gear set
- › Operating tool

Accessories	Article no.
	
Digital position display DRO 5 incl. 3 magnetic sensors	3383975
Magnetic strip length 1 100 mm	3383978
Factory assembly	9000420
› Info on the position display on page 231	

**The lathe (frequency converter) complies with the DIN EN 55011 standard: class C3 - note on „Operation of machines with frequency converters“ on page 323

Leading spindle lathes with feed gear for demanding users.

TU 2807V with brushless motor for continuously variable speed control

Facts that impress in terms of quality, performance and price

- Precision workmanship
- Powerful motor, low-maintenance motor
- Ribbed grey cast steel prism bed with strong ribbing, induction tempered and precision ground
- Free moving feed gear with rounded gear wheels running in an oil bath
- Tempered and polished z-axis guideway
- Guaranteed concentricity of spindle nose better than 0.009 mm
- Automatic longitudinal/leading spindle drive
- Leading spindle for thread tapping or automatic longitudinal turning
- Leading spindle borne on two sintered bearings
- Roll-milled trapezoidal spindles
- Handwheels on slide with adjustable fine scaling 0.04 / 0.01 mm
- All guides adjustable using cleats
- Clockwise/Anti-clockwise rotation switchable via control panel
- Thrust bearings
- Tempered main spindle borne on adjustable, precision taper roller bearings
- Tapered roller bearings in P5 quality
- Tempered spindle nose with Ø 26 mm spindle bore
- Chip guard on top slide
- Top slide displaceable on cross slide
- Tailstock adjustable ± 5 mm for turning spheres
- Tailstock spindle sleeve and handwheel with adjustable fine scaling 0.02 mm
- Fast, easy adjustment of tailstock without tools thanks to clamping lever
- Quadruple tool holder
- Emergency stop button
- Concentricity at chuck better than 0.04 mm
- Three-jaw lathe chuck included in standard scope of delivery
- Interchangeable gears in standard scope of delivery for thread tapping
- Fully equipped; the user can immediately start productive work after commissioning

TU 2807V

- Smooth action, powerful, brushless DC drive with excellent control characteristics
- High-precision steel chuck for higher speeds
- Speed change easily adjustable via potentiometer
- Digital speed display

TU 2807V
Powerful brushless drive

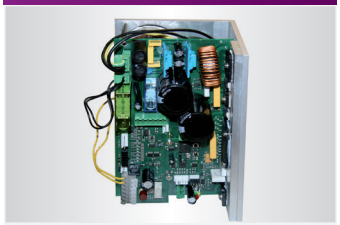

› Particularly smooth action
› Virtually constant torque over the entire speed range
› Extremely powerful

Accessories
Machine chassis MST1
Article no. 3440409

Levelling platen SE 1
(6 units needed)
Article no. 3381012



Fig.: TU 2807V

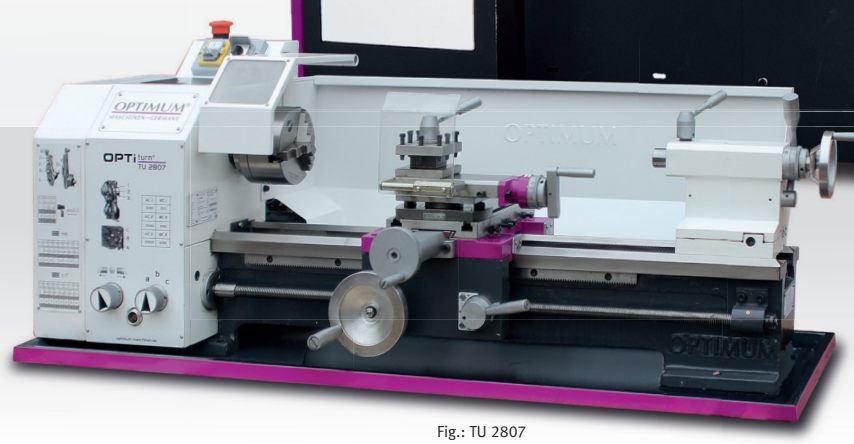

Fig.: TU 2807

Technical specifications, accessories and dimensions

BELT VARIO

Model	TU 2807	TU 2807V**
Article no. (230 V)	3427001	3427006
Article no. (400 V)	3427003	-
Output		
Electrical connection	230 V or 400 V	230 V / 1 Ph ~50 Hz
Drive motor	850 W	1.5 kW
Spindle		
Spindle taper	MT4	
Spindle holder	Short taper	
Spindle bore, bar passage diameter	Ø 26 mm	
Four-fold steel tool holder max. height	13.5 mm	
Work area		
Centre height	140 mm	
Centre width	700 mm	
Swing diameter over machine bed*	266 mm	
Swing over cross slide	170 mm	
Bed width	180 mm	
Speed range		
Spindle speed	150 - 2 000 rpm	30 - 4 000 rpm
Number of speeds	6 speeds	4 speeds, electronically controlled
Travel		
Top slide travel	60 mm	
Cross slide travel	160 mm	
Feeds and pitches		
Longitudinal feed within the range	0.07 - 0.4 mm/rev (6 feed rates)	
Pitch - metric in range	0.2 - 3.5 mm/rev (18 pitches)	
Pitch - inch in range	56 - 8 turns/inch (21 pitches)	
Tailstock		
Tailstock seat	MT2	
Tailstock- sleeve diameter/sleeve travel	30 mm / 85 mm	
Dimensions and weight		
Length x width x height	1 370 x 640 x 535 mm	1 370 x 660 x 440 mm
Net weight	196 kg	187 kg

Dimensions

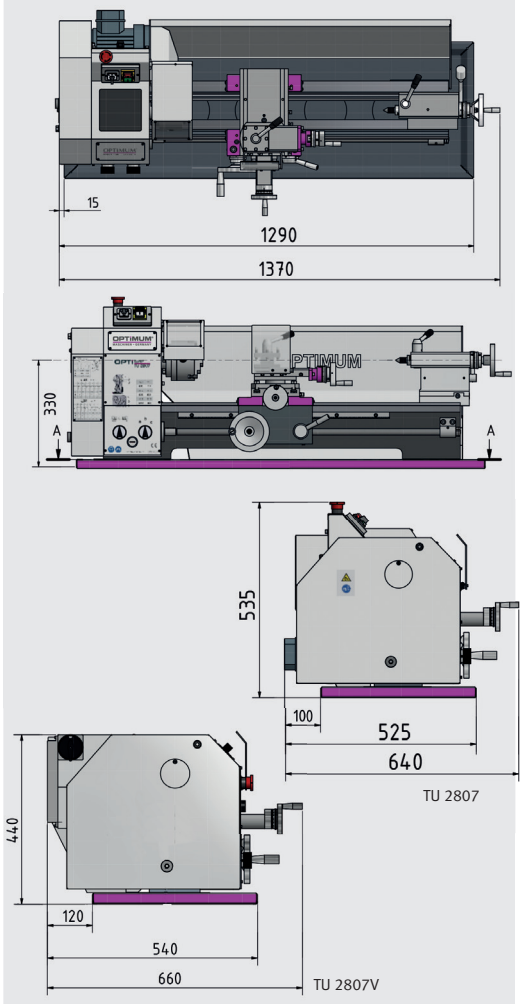

Lathe chucks and accessories	Article no.
Four-jaw lathe chuck Ø 125 mm, individual clamping (Chuck flange 3441312 required)	3442874
Four-jaw lathe chuck Ø 125 mm, centre clamping (Chuck flange 3441312 required)	3442812
Chuck flange for lathe chuck Ø 125 mm (3442874/3442812)	3441312
Three-jaw lathe chuck Ø 160 mm, centre clamping (Chuck flange 3441413 required)	3442716
Four-jaw lathe chuck Ø 160 mm, centre clamping (Chuck flange 3441413 required)	3442816
Chuck flange for lathe chuck Ø 160 mm (3442716/3442816)	3441413
› Information on lathe chucks from page 218	

Accessories	Article no.
Quick change tool holder SWH 1-A	3384301
Factory assembly SWH 1-A	9000401
Spare tool holder 20 x 90 type D for square chisels	3384302
Spare tool holder 20 x 85 type H for round chisels	3384321
Lathe tool set 10 mm, 11-part	3441602
Lathe tool set 12 mm, 11-part	3441603
Lathe tool set 12 mm, 5-part "Made in Germany"	3441212
› For information on lathe tool sets see on page 223	
Steady rest passageway max. Ø 55 mm	3441415
Follow rest passageway max. Ø 56 mm	3441410
Collet kit ER 32, 3 - 20 mm	3441122
Collet chuck ER 25, cylindrical	3441305
Collet chuck ER 32, short taper	3441306
› More accessories for lathes from page 214	

Contents of package

- › Three-jaw lathe chuck Ø 125 mm, centre clamping
- › Two fixed centres MT2 and MT4
- › Quadruplicate tool holder 13.5 mm
- › HSS lathe tools
- › Splashguard
- › Chip tray
- › Interchangeable gear set
- › Operating tool

Accessories	Article no.
	
Digital position display DRO 5 incl. 3 magnetic sensors	3383975
Magnetic strip length 1 100 mm	3383978
Factory assembly	9000420
› Info on the position display on page 231	

**The lathe (frequency converter) complies with the DIN EN 55011 standard: class C3 - note on „Operation of machines with frequency converters“ on page 323

Leading and feed spindle lathes with longitudinal and cross feed.

TU 3008G with gearbox.

TU 3008V with brushless motor for continuously variable speed control

Facts that impress in terms of quality, performance and price

- Precision workmanship
- Ribbed grey cast steel prism bed with strong ribbing, induction tempered and precision ground
- Tempered and polished z-axis guideway
- Free moving feed gear with rounded gear wheels running in an oil bath
- Guaranteed concentricity of spindle nose better than 0.009 mm
- Quadruple tool holder
- All guides adjustable using cleats
- Clockwise/Anti-clockwise rotation switchable via control panel
- Tempered main spindle borne on adjustable precision taper roller bearings
- Tapered roller bearings in P5 quality
- Tempered spindle nose
- Handwheels on slide with adjustable fine scaling 0.04 / 0.01 mm
- Large spindle bore Ø 38 mm
- Leading spindle for thread tapping or automatic longitudinal turning
- Leading and feed spindles borne on two sintered bearings
- Feed and lead spindle cover
- Automatic longitudinal/cross feeds
- Tailstock adjustable ± 5 mm for turning spheres
- Tailstock spindle sleeve and handwheel with adjustable fine scaling 0.02 mm
- Fast, easy adjustment of the tailstock without tools thanks to clamping lever
- Emergency stop button
- Concentricity at chuck better than 0.04 mm
- Three-jaw lathe chuck included in standard scope of delivery
- Interchangeable gears in standard scope of delivery for thread tapping

TU 3008
- Driven by V-belt

TU 3008G
- Gear drive

TU 3008V
- V-belt and brushless drive
- Smooth action, powerful, brushless DC drive with excellent control characteristics
- High-precision steel chuck for higher speeds
- Digital speed display

TU 3008V
Powerful brushless drive

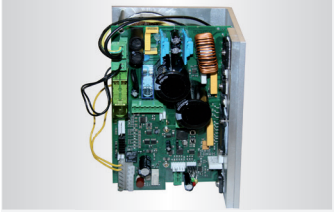

› Particularly smooth action
› Virtually constant torque over the entire speed range
› Extremely powerful

Measuring system prepared

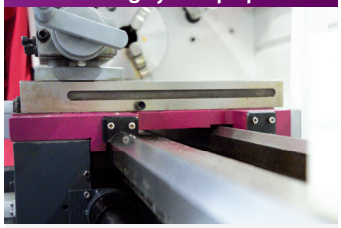

› Prepared for measuring system installation on the X, Z and Z0 axis



Accessories
Machine chassis MST1
Article no. 3440409

Fig.: TU 3008V with optional chassis MST 1

BELT GEAR DPA VARIO

Technical specifications, accessories and dimensions

Model	TU 3008	TU 3008G	TU 3008V**
Article no.	3427200	3427210	3427205
Output			
Electrical connection	400 V / 3 Ph ~50 Hz		230 V / 1 Ph
Drive motor	1.1 kW		
Spindle			
Spindle taper	MT5		
Spindle holder	Camlock DIN ISO 702-2 No. 4		
Spindle bore, bar passage diameter	Ø 38 mm		
Quadruple tool holder mounting height	25 mm		
Work area			
Centre height	158 mm		
Centre width	800 mm	720 mm	800 mm
Swing diameter over machine bed*	310 mm		
Swing over cross slide	190 mm		
Bed width	180 mm		
Speed range			
Spindle speed / stages TU 3008	150 - 2 000 rpm / 6 speeds		
Spindle speed/stages TU 3008G	165 - 2 400 rpm / 6 speeds		
Spindle speed/stages TU 3008V	30 - 3 000 rpm / 5 speeds, electronically controlled		
Travel			
Top slide travel	65 mm		
Cross slide travel	150 mm		
Feeds and pitches			
Longitudinal feed within the range	0.085 - 0.832 mm/rev (9 feeds)		
Cross feed within	0.01 - 0.1 mm/rev (9 feeds)		
Pitch - metric in range	0.2 - 3.5 mm/rev (18 pitches)		
Pitch - inch in range	56 - 8 turns/inch (21 pitches)		
Tailstock			
Tailstock seat	MT3		
Tailstock- sleeve diameter/sleeve travel	Ø 38 mm/70 mm		
Dimensions and weight			
Length x width x height	1 525 x 705 x 575 mm		
Net weight	226 kg	261 kg	243 kg

Dimensions

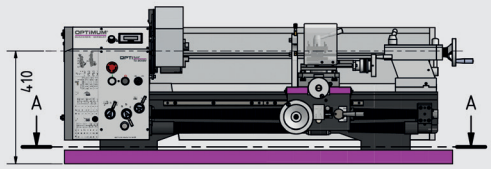

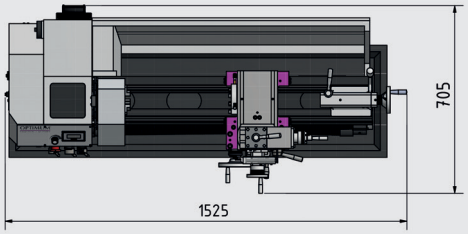

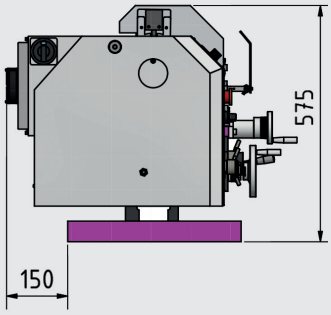

Lathe chuck Ø 160 mm No. 4	Article no.
OPTIMUM Four-jaw lathe chuck centric clamping	3442840
BISON Four-jaw lathe chuck centre clamping	3450355
› Information on lathe chucks from page 218	

Accessories	Article no.
Quick change tool holder SWH 1-A	3384301
Factory assembly SWH 1-A	9000401
Spare tool holder 20 x 90 type D for square chisels	3384302
Spare tool holder 20 x 85 type H for round chisels	3384321
Lathe tool set 16 mm, 11-part	3441604
Lathe tool set 16 mm, 5-part	3441668
Lathe tool set 16 mm, 5-part	3441610
Lathe tool set 16 mm, 5-part "Made in Germany"	3441216
› For information on lathe tool sets see page 224	
Follow rest passageway Ø 6 - 55 mm	3441460
Steady rest passageway Ø 6 - 60 mm	3441461
Collet kit 3 - 25 mm, 5C, 17-part	3441509
Collet chuck 5C - Camlock no. 4	3441554
Machine chassis MST1	3440409
Levelling platen SE 1 (if the MST1 chassis is used, 6 units are required)	3381012
› More accessories for lathes from page 214	

Contents of package

- › Three-jaw lathe chuck Ø 160 mm, centre clamping
- › Two fixed centres MT3 and MT5
- › Quadruplicate tool holder 25 mm
- › Splashguard
- › Chip tray
- › Interchangeable gear set
- › Operating tool

Accessories	Article no.



Digital position display DRO 5 incl. 3 magnetic sensors	3383975
Magnetic strip length 1 100 mm	3383978
Assembly kit (holders for the X / Y and Z0 axis/set of screws)	3383985
Factory assembly	9000420
› Info on the position display on page 231	

**The lathe (frequency converter) complies with the DIN EN 55011 standard: class C3 - note on „Operation of machines with frequency converters“ on page 323

NEW

TRADES

Gear-head gap-bed lathe impresses with simple handling.

Facts that impress in terms of quality, performance and price

- Precision workmanship
- Tempered and polished z-axis guideway
- Guaranteed concentricity of spindle nose better than 0.015 mm
- Free moving feed gear with rounded gear wheels running in an oil bath
- Switch rod on the bed slide for selection of longitudinal or cross feed
- Tempered main spindle borne on adjustable, precision taper roller bearings
- Handwheels on slide with adjustable fine scaling 0.04 / 0.01 mm
- Ribbed grey cast steel prism bed with strong ribbing, induction tempered and precision ground
- All guides adjustable using cleats
- Tempered spindle nose
- Leading spindle for thread tapping or automatic longitudinal turning
- Leading and feed spindles borne on two sintered bearings
- Tailstock adjustable ± 5 mm for turning spheres
- Tailstock spindle sleeve and handwheel with adjustable fine scaling 0.02 mm
- Fast, easy adjustment of the tailstock without tools thanks to clamping lever
- Emergency stop button
- Quadruple tool holder
- Concentricity at chuck better than 0.04 mm
- Three-jaw lathe chuck included in standard scope of delivery
- Interchangeable gears in standard scope of delivery for thread tapping

Spindle holder

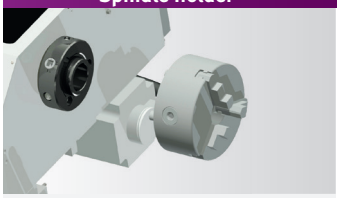

› The spindle is designed as Camlock DIN ISO 702-2 no.4 holding fixture

Longitudinal/cross feeds

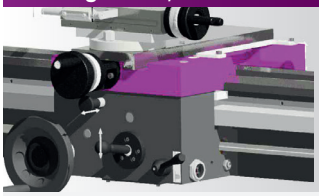

› Automatic longitudinal/cross feeds
› Switch rod enables longitudinal or cross feed. The engagement lever activates the feed with the drawbar



Accessories
Machine chassis MST1
Article no. 3440409

Fig.: TH 3110 – Shown with an optional machine chassis MST 1

GEAR

Technical specifications, accessories and dimensions

Model	TM 3110
Article no.	3403010
Output	
Electrical connection	400 V / 3 Ph ~50 Hz
Spindle	
Drive motor	1.1 kW
Spindle taper	MT5
Spindle holder	Camlock DIN ISO 702-2 No. 4
Spindle bore, bar passage diameter	Ø 38 mm
Quadruple tool holder mounting height	max. 16 mm
Work areas	
Centre height	155 mm
Centre width	1 000 mm
Swing diameter over machine bed*	323 mm
Swing over cross slide	216 mm
Bed width	190 mm
Speed range	
Spindle speeds	65 - 2,000 rpm
Number of speeds	9 speeds
Travel	
Top slide travel	90 mm
Cross slide travel	168 mm
Feed and pitches	
Longitudinal feed within the range	0.02 - 0.4 mm/rev (24 feeds)
Cross feed within	0.01 - 0.2 mm/rev (32 feeds)
Pitch - metric in range	0.4 - 10 mm/rev (29 pitches)
Pitch - inch in range	56 - 4 turns/inch (34 pitches)
Tailstock	
Tailstock seat	MT3
Spindle sleeve diameter / stroke	Ø 38 mm / 100 mm
Dimensions and weight	
Length x width x height	1,749 x 740 x 566 mm
Net weight	360 kg

Dimensions

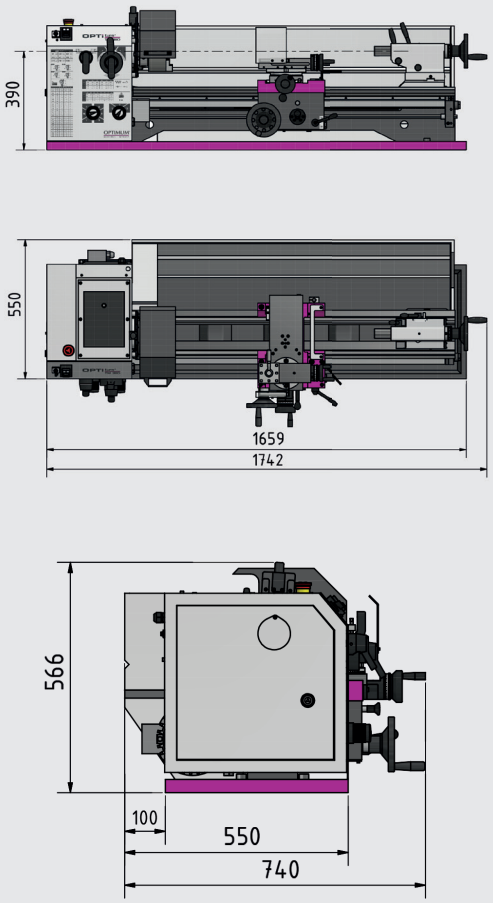

Lathe chuck Ø 160 mm No. 4	Article no.
OPTIMUM Four-jaw lathe chuck centric clamping	3442840
BISON Four-jaw lathe chuck centre clamping	3450355
› Information on lathe chucks from page 218	

Accessories	Article no.
Quick change tool holder SWH 3-E	3384303
Factory assembly SWH 3-E	9000400
Lathe tool set 16 mm, 11-part	3441604
Lathe tool set 16 mm, 5-part	3441668
Lathe tool set 16 mm, 5-part "Made in Germany"	3441216
Lathe tool set 16 mm, 5-part	3441610
› For information on lathe tool sets see page 224	
Follow rest passageway Ø 10 - Ø 70 mm	3441465
Steady rest passageway Ø 10 - Ø 70 mm	3441466
Machine chassis MST1	3440409
Levelling platen SE 1 (if the MST1 chassis is used, 6 units are required)	3381012
› More accessories for lathes from page 214	

Accessories	Article no.
	
Dig. Position display DRO 5 incl. 3 magnetic sensors	3383975
Magnetic strip length 1 100 mm	3383978
Factory assembly	9000420
› Info on the position display on page 231	

Contents of package

- › Three-jaw lathe chuck Ø 160 mm, no. 4
- › Reduction sleeve MT5 - MT3
- › Two fixed centres MT3
- › Quadruplicate tool holder 25 mm
- › Interchangeable gear set
- › Machine initially filled with premium grade oil
- › Operating tool

*For important details on operating machines with frequency converters, general instructions and explanations of packaging surcharges, data on TPFR, see page 323

TWO-PART WITH STEEL CHASSIS



SIEMENS SINAMICS G 120D Frequency inverters

Information on the Vario lathe TH 4010V

SINAMICS G120D
Brief overview of benefits

Highlights at a glance
Advanced safety function (STO, SLS)
STO - safe torque off as per EN 61800-5
SLS - Safely limited speed as per EN 61800-5

- Recovery, low circuit feedback
- Energy savings up to 20 %
- No brake resistors required
- Fast and easy diagnostic capability through LEDs
- Standardised plug connections throughout
- Rugged and flat design (IP65)
- EMC class C3 as per EN 61800-3
- Safety Integrated without encoder!
- More direct switch-over
- Faster braking
- Resilient to high overload



Siemens SAFETY INTEGRATED

- A comprehensive safety package that helps to protect both persons and machines. And in an extremely efficient and economic way thanks to complete integration of the safety functions in the control and drive technology. In addition, it ensures safe and practical operation of your machine under all required operating conditions. The safety functions meet the requirements of DIN EN 61508 for use up to and including SIL (Safety Integrity Level) 2 and categories 3 and PL (Performance Level) d as per DIN EN ISO 13849.

The feature scope includes, for example:

- Functions for safe monitoring of speed and standstill
- Direct connection of all safety-related signals and their internal logical links

DIN
Machines as per standard EN 61800

LATHES



TRADES

Fully equipped leading and feed spindle lathes.

TH 3309D / TH 3309V with digital position display DPA 21, TH 3309V with continuously variable speed control

Facts that impress in terms of quality, performance and price

- Tempered and polished z-axis guideway
- Prism bed with strong ribbing, induction tempered and precision ground
- Spindle collet Camlock DIN ISO 702-2 no. 4
- Precision slide
- Hand wheels with adjustable fine scaling 0.04 / 0.02 mm
- Hand wheels decoupled and approved in line with EN 23125
- Safety hand wheels with release function in the X and Z axis
- All guides adjustable using cleats
- Main spindle runs in oil bath
- Gearwheels smooth running, tempered and ground
- Adjustment range top slide ± 90°
- LED machine lamp integrated in chip guard
- Guaranteed concentricity of spindle nose better than 0.015 mm
- Two-channel CW/CCW switch approved in line with EN 23125
- DC 24-Volt electric system with two-channel safety circuit as per EN 23125
- Switch with lifecycle calculation, approved in line with EN ISO 13849
- Clockwise/anti-clockwise rotation switchable on bed slide
- Leading spindle cover
- Tailstock adjustable ± 10 mm for turning spheres
- Tailstock spindle sleeve and handwheel with adjustable fine scaling 0.02 mm
- Fast, easy adjustment without tools thanks to clamping lever
- Machine chassis with tool compartment on right-hand side (left side with 3 covers (no compartments))
- Pull-out chip drawer with guide rails
- Lockable main switch
- Quadruple tool holder
- Emergency stop device with foot pedal
- Chuck protection approved in line with EN 23125
- Interchangeable gears in standard scope of delivery

TH 3309V
SIEMENS inverter



SINAMICS G110M

› Premium quality
› Highest energy efficiency
› Speed change easily adjustable via potentiometer

TH 3309D / TH 3309V
Dig. Position display DPA 21



› User-friendly membrane keyboard, splash water protected, sealed and dazzle free



Fig.: TH 3309D - Shown with optional lathe chuck

GEAR DPA VARIO

Technical specifications, accessories and dimensions

Model	TH 3309	TH 3309 D	TH 3309 V
Article no.	3402030	3402040	3402046
Output			
Electrical connection	400 V / 3 Ph ~50 Hz		
Drive motor	1.5 kW		
Spindle			
Spindle taper	MT5		
Spindle holder	Camlock DIN ISO 702-2 No. 4		
Spindle bore, bar passage diameter	Ø 38 mm		
Quadruple tool holder mounting height	16 mm		
Work area			
Centre height	165 mm		
Centre width	830 mm		
Swing diameter over machine bed*	330 mm		
Swing over cross slide	208 mm		
Bed width	181 mm		
Speed range			
Spindle speed	70 - 2 000 rpm		15 - 2 500 rpm
Number of speeds	16 speeds		8 speed, electrically controlled
Travel			
Top slide travel	98 mm		
Cross slide travel	164 mm		
Feeds and pitches			
Longitudinal feed within the range	0.052 - 1.392 mm/rev (32 feeds)		
Cross feed within	0.014 - 0.38 mm/rev (32 feeds)		
Pitch - metric in range	0.4 - 7 mm/rev (26 pitches)		
Pitch - inch in range	56 - 4 hel./inch		
Tailstock			
Tailstock seat	MT3		
Tailstock- sleeve diameter/sleeve travel	Ø 32 mm/110 mm		
Dimensions and weight			
Length x width x height	1 685 x 745 x 1 320 (DPA 1 590) mm		
Net weight	510 kg	512 kg	510 kg

Dimensions

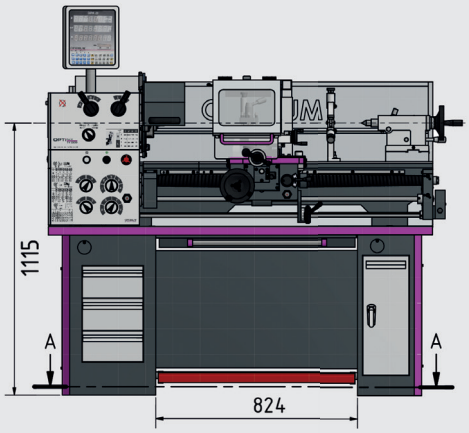

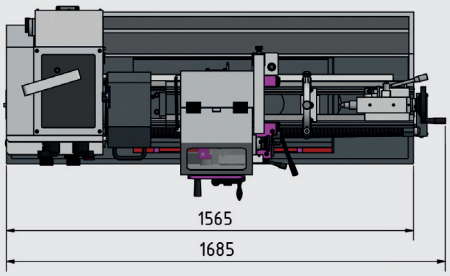

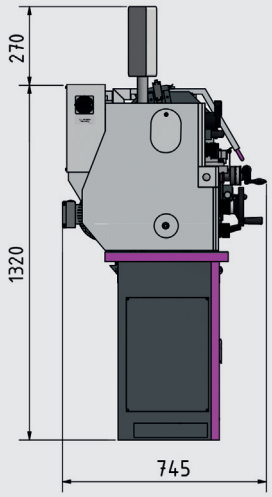

Fig.: TH 3309D

Lathe chuck	Article no.
OPTIMUM three-jaw lathe chuck Ø 200 mm no. 4, centric	3442762
OPTIMUM Four-jaw lathe chuck Ø 200 mm no. 4, centric	3442843
OPTIMUM Four-jaw lathe chuck Ø 200 mm no. 4, individual	3442879
BISON three-jaw lathe chuck Ø 160 mm no. 4, centric	3450305
BISON three-jaw lathe chuck Ø 200 mm no. 4, centric	3450310
BISON Four-jaw lathe chuck Ø 160 mm no. 4, centric	3450355
BISON Four-jaw lathe chuck Ø 200 mm no. 4, centric	3450360
› Information on lathe chucks from page 218	

Remember to order a lathe chuck

Accessories	Article no.
Vibration-damping machine base SE55 (8 units required)	3352981
Quick change tool holder SWH 3-E	3384303
Factory assembly SWH 3-E	9000400
Lathe tool set 16 mm, 11-part	3441604
Lathe tool set 16 mm, 5-part	3441668
Lathe tool set 16 mm, 5-part "Made in Germany"	3441216
Lathe tool set 16 mm, 5-part	3441610
› For information on lathe tool sets see page 224	
› More accessories for lathes from page 214	

Contents of package

- › Steady rest passageway Ø 6 - Ø 50 mm
- › Follow rest passageway Ø 8 - Ø 30 mm
- › LED machine lamp
- › Reduction sleeve MT5 - MT3
- › Two fixed centres MT3
- › Quadruplicate tool holder 16 mm
- › Interchangeable gear set
- › Machine mobile base
- › Machine initially filled with premium grade oil
- › Operating tool

*For important details on operating machines with frequency converters, general instructions and explanations of packaging surcharges, data on TPFR, see page 323
**The lathe (frequency converter) complies with the DIN EN 55011 standard: class C2

NEW

TRADES

Feed and lead spindle lathes impress with their rugged design and simple handling. TM 3310D with DPA 31 digital position display

Facts that impress in terms of quality, performance and price

- Tempered and polished z-axis guideway
- Guaranteed concentricity of spindle nose better than 0.015 mm
- DC 24 Volt electrical system
- Free moving feed gear with rounded gear wheels running in an oil bath
- Hand wheels with adjustable fine scaling 0.04 / 0.02 mm
- Safety hand wheels with release function acc. to EN23125 in the X and Z axis
- Clockwise/anti-clockwise rotation switchable on bed slide
- Two-channel CW/CCW switch approved in line with EN 23125
- Switch rod on the bed slide for selection of longitudinal or cross feed
- Switch with lifecycle calculation, approved in line with EN ISO 13849
- Tempered main spindle borne on adjustable, precision taper roller bearings
- Machine chassis with rugged steel design
- Motor circuit switch
- Main motor electrically braked
- Quadruple tool holder
- Emergency stop button right and left
- Three-jaw lathe chuck included in standard scope of delivery

TM 3310D - Digital position display DPA 31

NEW

Display:
› User-friendly membrane keyboard, splash water protected, dazzle free and easy to clean



Measuring system:
› Magnetic belt on X and Z0 axis
› Scale on Z axis
› The electronic measuring components of the scale are protected and sealed in the housing
› Provides accurate and reliable measurement results even if the measuring system is operated in oil or coolant
› Tolerant towards vibration and magnetic interference

User-friendly membrane keyboard



› Lockable main switch
› Control on
› Direct run spindle
› Emergency stop push button



Fig.: TM 3310D

Spindle holder



› The spindle is designed as Camlock DIN ISO 702-2 no.4 holding fixture.

LED machine lamp



› Dazzle-free, integrated into chip guard

Chip tray



› Pull-out chip drawer with guide rails

GEAR DPA

Technical specifications, accessories and dimensions

Model	TM 3310
Article no.	3403020
Model	**TM 3310D**
Article no.	3403025
Output	
Electrical connection	400 V / 3 Ph ~50 Hz
Spindle	
Drive motor	1.5 kW
Spindle taper	MT5
Spindle holder	Camlock DIN ISO 702-2 No. 4
Spindle bore, bar passage diameter	Ø 38 mm
Quadruple tool holder mounting height	max. 16 mm
Work areas	
Centre height	165 mm
Centre width	1 000 mm
Swing diameter over machine bed*	330 mm
Swing over cross slide	216 mm
Speed range	
Spindle speeds	65 - 2,000 rpm
Number of speeds	9 speeds
Travel	
Top slide travel	90 mm
Cross slide travel	168 mm
Feed and pitches	
Longitudinal feed within the range	0.02 - 0.4 mm/rev (24 feeds)
Cross feed within	0.01 - 0.2 mm/rev (32 feeds)
Pitch - metric in range	0.4 - 10 mm/rev (29 pitches)
Pitch - inch in range	56 - 4 hel./inch
Tailstock	
Tailstock seat	MT3
Spindle sleeve diameter / stroke	Ø 38 mm / 100 mm
Dimensions and weight	
Length x width x height	1 760 x 745 x 1 320 (DPA 1 590) mm
Net weight	469 kg/471 kg

Dimensions

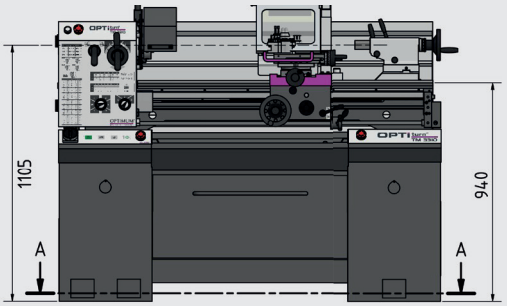

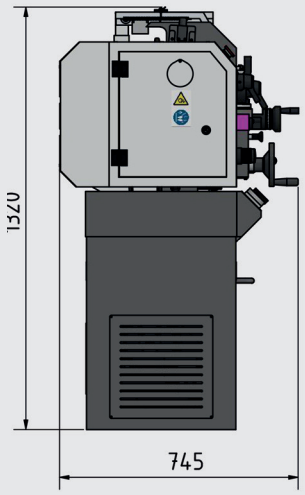

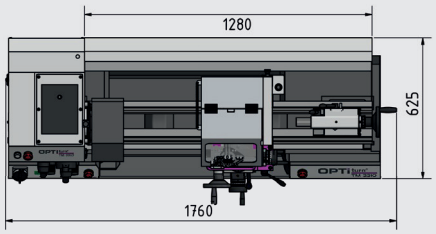

Lathe chuck Ø 160 mm No. 4	Article no.
OPTIMUM Four-jaw lathe chuck centric clamping	3442840
BISON Four-jaw lathe chuck centre clamping	3450355
› Information on lathe chucks from page 218	

Accessories	Article no.
Follow rest passageway Ø 10 - Ø 70 mm	3441469
Steady rest passageway Ø 10 - Ø 70 mm	3441470
Vibration-damping machine base SE55 (6 units required)	3352981
Quick change tool holder SWH 3-E	3384303
Factory assembly SWH 3-E	9000400
Lathe tool set 16 mm, 11-part	3441604
Lathe tool set 16 mm, 5-part	3441668
Lathe tool set 16 mm, 5-part "Made in Germany"	3441216
Lathe tool set 16 mm, 5-part	3441610
› For information on lathe tool sets see page 224	
› More accessories for lathes from page 214	

Our recommendation

cleancraft
flexCAT 378 EOT-PRO
Article no. 7003380



Contents of package

- › Three-jaw lathe chuck Ø 160 mm, no. 4
- › LED machine lamp
- › Reduction sleeve MT5 - MT3
- › Non-travelling centre MT3
- › Quadruplicate tool holder 16 mm
- › Interchangeable gear set
- › Machine mobile base
- › Machine initially filled with premium grade oil
- › Operating tool

*For important details on operating machines with frequency converters, general instructions and explanations of packaging surcharges, data on TPFR, see page 323

TRADES

Fully equipped lathes for mechanics.

TH 3610D with DPA 21 digital position display

Facts that impress in terms of quality, performance and price

- Tempered and polished z-axis guideway
- Prism bed with strong ribbing, induction tempered and precision ground
- Spindle collet Camlock DIN ISO 702-2 no. 5
- Precision slide
- Hand wheels with adjustable fine scaling 0.04 / 0.02 mm
- All guides adjustable using cleats
- Main spindle runs in oil bath
- Gearwheels smooth running, tempered and ground
- Guaranteed concentricity of spindle nose better than 0.015 mm
- Gears and shafts tempered and ground, running in oil bath on precision bearings
- Hand wheels decoupled and approved in line with EN 23125
- Safety hand wheels with release function in the X and Z axis
- Two-channel CW/CCW switch approved in line with EN 23125
- Switch with lifecycle calculation, approved in line with EN ISO 13849
- Motor circuit breaker, lockable main switch
- Clockwise/anti-clockwise rotation switchable on bed slide
- Leading spindle cover
- Tailstock adjustable ± 10 mm for turning spheres
- Tailstock spindle sleeve and handwheel with adjustable fine scaling 0.025 mm
- Fast, easy adjustment without tools thanks to clamping lever
- Machine chassis with tool compartments on both sides
- Pull-out chip drawer with guide rails
- Quadruple tool holder
- Emergency stop device with foot pedal
- LED machine lamp integrated in chip guard

Control cabinet



› 24 Volt DC power supply
› All contactors und relays by SIEMENS or Schneider

TH 3610D
Dig. Position display DPA 21



› User-friendly membrane keyboard, splash water protected, sealed and dazzle free
› Glass scales



Fig.: TH 3610D - Shown with optional lathe chuck

GEAR DPA

Technical specifications, accessories and dimensions

Model	TH 3610	TH 3610D
article no.	3402050	3402060
Output		
Electrical connection	400 V / 3 Ph ~50 Hz	
Drive motor	1.5 kW	
Spindle		
Spindle taper	MT6	
Spindle holder	Camlock DIN ISO 702-2 No. 5	
Spindle bore, bar passage diameter	Ø 52 mm	
Quadruple tool holder mounting height	max. 16 mm	
Work area		
Centre height	180 mm	
Centre width	980 mm	
Swing diameter over machine bed*	356 mm	
Swing over cross slide	225 mm	
Bed width	187 mm	
Speed range		
Spindle speed	70 - 2 000 rpm	
Number of speeds	8 speeds	
Travel		
Top slide travel	100 mm	
Cross slide travel	170 mm	
Feeds and pitches		
Longitudinal feed within the range	0.052 - 1.392 mm/rev (32 feeds)	
Cross feed within	0.014 - 0.38 mm/rev (32 feeds)	
Pitch - metric in range	0.4 - 7 mm/rev (26 pitches)	
Pitch - inch in range	56 - 4 turns/inch (34 pitches)	
Tailstock		
Tailstock seat	MT3	
Tailstock spindle sleeve diameter / stroke	Ø 42 mm / 120 mm	
Dimensions and weight		
Length x width x height	1 930 x 725 x 1 350 / 1 620 mm	
Net weight	570 kg	572 kg

Dimensions

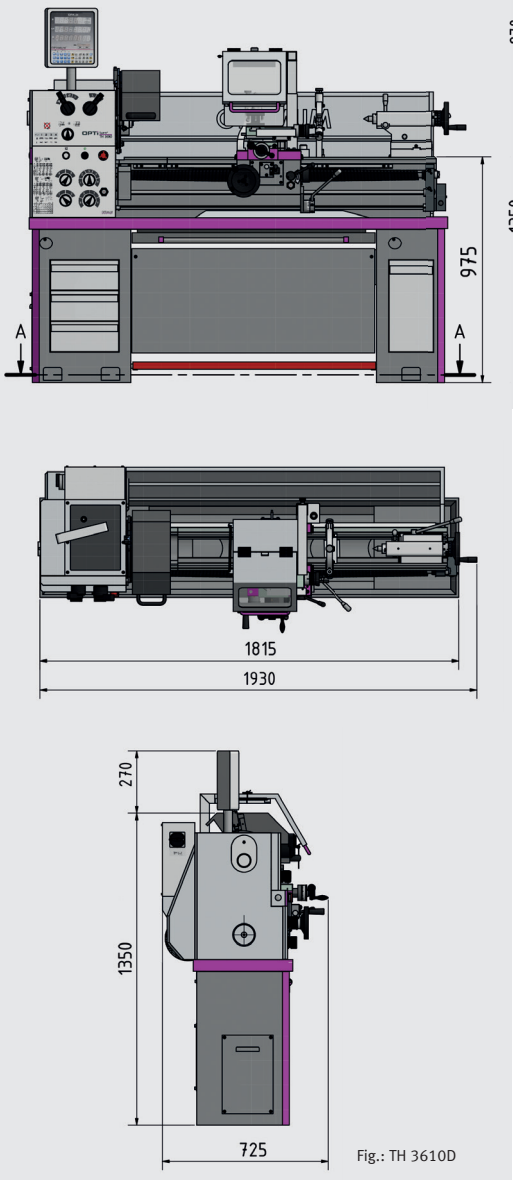

Fig.: TH 3610D

Lathe chuck	Article no.
OPTIMUM Four-jaw lathe chuck Ø 200 mm no. 5, centric	3442845
OPTIMUM Four-jaw lathe chuck Ø 200 mm no. 5, individual	3442880
BISON three-jaw lathe chuck Ø 200 mm no. 5, centric	3450315
BISON Four-jaw lathe chuck Ø 200 mm no. 5, centric	3450365
› Information on lathe chucks from page 218	

Accessories	Article no.
Quick change tool holder SWH 3-E	3384303
Factory assembly SWH 3-E	9000400
Spare tool holder 20 x 100 type D for square chisels	3384304
Spare tool holder 30 x 100 type H for round chisels	3384322
Lathe tool set 16 mm, 11-part	3441604
Lathe tool set 16 mm, 5-part	3441668
Lathe tool set 16 mm, 5-part	3441610
› For information on lathe tool sets see page 224	
Collet chuck 5C	3441555
Vibration-damping machine base SE55 (6 units required)	3352981
Position stop with granular adjustment	3441523
› More accessories for lathes from page 214	

Remember to order a lathe chuck

Contents of package

- › Steady rest passageway Ø 10 - Ø 70 mm
- › Follow rest passageway Ø 10 - Ø 60 mm
- › LED machine lamp
- › Reduction sleeve MT6 - MT3
- › Non-travelling centre MT3
- › Fixed, but temperature resistant centre MT3
- › Quadruplicate tool holder 16 mm
- › Interchangeable gear set
- › Machine mobile base
- › Machine initially filled with premium grade oil
- › Operating tool

*For important details on operating machines with frequency converters, general instructions and explanations of packaging surcharges, data on TPFR, see page 323

TRADES

Fully equipped lathes for mechanics. Impressive precision and performance

TH 4010D with digital position display DPA 21, TH 4010V additionally with SIEMENS inverter Vario drive

Facts that impress in terms of quality, performance and price

- Tempered and polished z-axis guideway
- Spindle collet Camlock DIN ISO 702-2 no. 5
- Precision slide
- Hand wheels with adjustable fine scaling 0.04 / 0.02 mm
- All guides adjustable using cleats
- Adjustment range top slide ± 90°
- Guaranteed concentricity of spindle nose better than 0.015 mm
- Main spindle runs in oil bath
- Gearwheels smooth running, tempered and ground
- Gears and shafts tempered and ground, running in oil bath on precision bearings
- Two-channel CW/CCW switch approved in line with EN 23125
- Switch with lifecycle calculation, approved in line with EN ISO 13849
- DC 24 Volt electrical system
- Lockable main switch
- Clockwise/anti-clockwise rotation switchable on bed slide
- Safety hand wheels with release function acc. to EN23125 in the X and Z axis
- Tailstock adjustable ± 10 mm for turning spheres
- Tailstock spindle sleeve and handwheel with adjustable fine scaling 0.025 mm
- Fast, easy adjustment without tools thanks to clamping lever
- Grey cast iron prism bed with strong ribbing, induction tempered and precision ground
- Pull-out chip drawer with guide rails
- Emergency stop device with foot pedal
- Machine base with 3 covers (no compartments)
- Coolant system
- LED machine lamp in chip guard

TH 4010 / TH 4010D:

- Motor circuit switch

TH 4010V:

- Rev counter
- Speed monitoring in line with Machinery Directive
- Two speeds
- Quick change tool holder 3-E
- Tool holder 20 x 100 type D for square chisels

TH 4010V
SIEMENS inverter

Made in EU



› **SINAMICS G120D**
› More information: „Siemens SINAMICS G 120D Frequency inverters“ on page 174
› Safety Integrated

TH 4010D / TH 4010V
Dig. Position display DPA 21



› User-friendly membrane keyboard, splash water protected, sealed and dazzle free



Fig.: TH 4010D - Shown with optional lathe chuck

Technical specifications, accessories and dimensions

Model	TH 4010		
article no.	3402070		
Model	**TH 4010D**		**TH 4010V****
article no.	3402080		3402085
Output			
Electrical connection	400 V / 3 Ph ~50 Hz		
Drive motor	1.5 / 2.4 kW		4 kW
Spindle			
Spindle taper	MT6		
Spindle holder	Camlock DIN ISO 702-2 No. 5		
Spindle bore, bar passage diameter	Ø 52 mm		
Quadruple tool holder mounting height	max. 16 mm		
Technical data			
Centre height	205 mm		
Centre width	1 000 mm		
Swing diameter over machine bed*	410 mm		
Swing over cross slide	255 mm		
Bed width	206 mm		
Swing without bed bridge	540 mm		
Turning length in bed bridge	165 mm		
Speed range			
Spindle speed	45 - 1 800 rpm		30 - 3 000 rpm
Speeds	16 speeds		2 speeds elec. control
Travel			
Top slide travel	100 mm		
Cross slide travel	195 mm		
Feeds and pitches			
Longitudinal feed within the range	0.043 - 0.653 mm/rev (48 feeds)		
Cross feed within	0.015 - 0.206 mm/rev (48 feeds)		
Pitch - metric in range	0.4 - 7 mm/rev (42 pitches)		
Pitch - inch in range	70 - 4 turns/inch (42 pitches)		
Tailstock			
Tailstock seat	MT3		
Tailstock- sleeve diameter/ sleeve travel	Ø 45 mm / 130 mm		
Dimensions and weight			
Length x width x height	1 920 x 740 x 1 222 (DPA 1 555) mm		
Net weight	735 kg	737 kg	780 kg

Dimensions

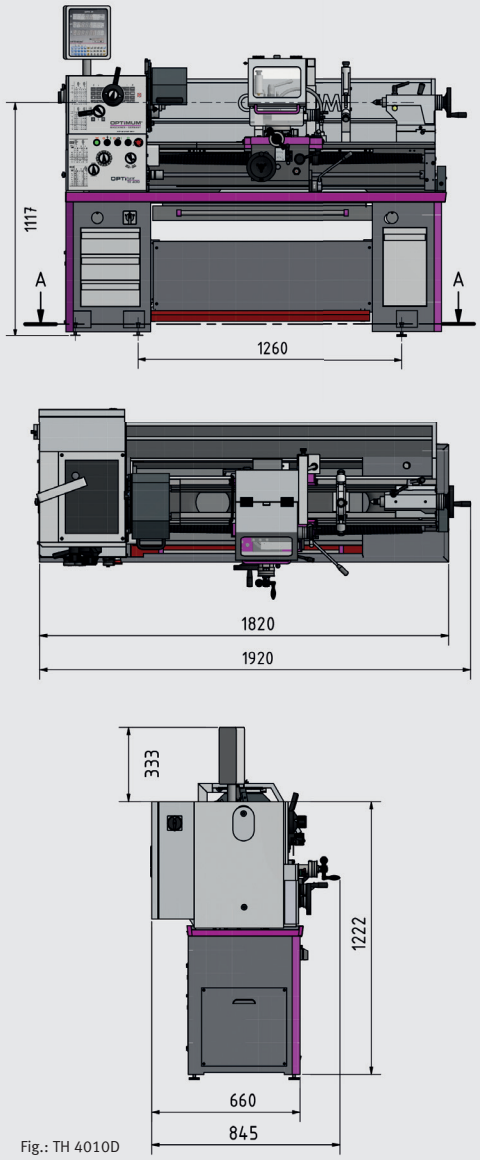

Fig.: TH 4010D

Lathe chuck Ø 200 mm No. 5	Article no.
OPTIMUM Four-jaw lathe chuck, centric - speed 3 000 rpm	3442845
OPTIMUM Four-jaw lathe chuck, single - speed 2 100 rpm	3442880
BISON three-jaw lathe chuck, centric - speed 3 000 rpm	3450315
BISON Four-jaw lathe chuck, centric - speed 3 000 rpm	3450365
› Information on lathe chucks from page 218	

Accessories	Article no.
Quick change tool holder SWH 3-E	3384303
Factory assembly SWH 3-E	9000400
Spare tool holder 20 x 100 type D for square chisels	3384304
Spare tool holder 30 x 100 type H for round chisels	3384322
Lathe tool set 16 mm, 11-part	3441604
Lathe tool set 16 mm, 5-part	3441668
Lathe tool set 16 mm, 5-part "Made in Germany"	3441216
› For information on lathe tool sets see page 224	
Levelling platen SE 2 (6 units required)	3381016
› More accessories for lathes from page 214	

Remember to order a lathe chuck

Contents of package
› Steady rest passageway Ø 10 - Ø 100 mm
› Follow rest passageway Ø 10 - Ø 80 mm
› LED machine lamp
› Reduction sleeve MT6 - MT3
› Non-travelling centre MT3
› Fixed, but temperature resistant centre MT3
› Change gear kit
› Machine initially filled with premium grade oil
› Operating tool
TH 4010 / TH 4010D
› Quadruplicate tool holder 16 mm
TH 4010V
› Quick change tool holder 3-E
› Tool holder 20 x 100 type D for square chisels

*For important details on operating machines with frequency converters, general instructions and explanations of packaging surcharges, data on TPFR, see page 323
**The lathe (frequency converter) complies with the DIN EN 55011 standard: class C2

TRADES

Feed and lead spindle lathes impress with their rugged design and simple handling.

TM 4010D with DPA 21 digital position display

Facts that impress in terms of quality, performance and price

- Tempered and polished z-axis guideway
- Spindle collet Camlock DIN ISO 702-2 no. 4
- Guaranteed concentricity of spindle nose better than 0.015 mm
- All pitch gears made of steel, hardened and polished, shafts on needle bearings, all components lubricated in an oil bath
- Clockwise/anti-clockwise rotation switchable on bed slide
- Safety hand wheels with release function in the X and Z axis
- Switch with lifecycle calculation, approved in line with EN ISO 13849
- Two-channel CW/CCW switch approved in line with EN 23125
- Perfectly concentric main spindle guarantees high load capacity thanks to use of precision taper roller bearings
- With safety device to prevent simultaneous operation of thread cutting and pitch mechanism
- Motor circuit switch
- Main motor electrically braked
- Coolant pump with coolant tank and fill level display Tank removable for easy cleaning
- LED machine lamp in machine housing
- Machine chassis with rugged steel design
- Emergency stop button right and left
- Lockable main switch
- Three-jaw lathe chuck included in standard scope of delivery

TM 4010D

- **Digital position display DPA21**
  - › User-friendly membrane keyboard, splash water protected, sealed and dazzle free
  - › Glass scales

Control cabinet



- › 24 Volt DC power supply
- › All contactors und relays by SIEMENS or Schneider

Membrane keyboard



› User-friendly membrane keyboard with functions: machine on, coolant pump, light and direct run

YouTube

Follow this for the video presentation of our OPTIMUM lathe TM 4010D

Chip drawer



- › Fold-up type
- › Easy chip cleaning from front



Fig.: TM 4010D

Technical specifications, accessories and dimensions

GEAR DPA

Model	TM 4010	TM 4010D
Article no.	3403040	3403045
Output		
Electrical connection	400 V / 3 Ph ~50 Hz	
Total rated value	3 kW	
Coolant pump motor	100 Watts	
Spindle		
Drive motor	2.2 kW	
Spindle taper	MT6	
Spindle holder	Camlock DIN ISO 702-2 No. 5	
Spindle bore, bar passage diameter	Ø 53 mm	
Quick change tool holder	SWH 3-E	
Work areas		
Centre height	200 mm	
Centre width	1 000 mm	
Swing diameter over machine bed*	356 mm	
Swing over cross slide (1)	250 mm	
Bed width	203 mm	
Speed range		
Spindle speeds	70 - 2 000 rpm	
Number of speeds	8 speeds	
Travel		
Top slide travel	98 mm	
Cross slide travel	185 mm	
Feed and pitches		
Longitudinal feed within the range	0.014 - 0.38 mm/rev (26 feeds)	
Cross feed within	0.052 - 1.392 mm/rev (32 feeds)	
Pitch - metric in range	0.4 - 7 mm/rev (32 pitches)	
Pitch - inch in range	56 - 4 turns/inch (31 pitches)	
Tailstock		
Tailstock seat	MT4	
Spindle sleeve diameter / stroke	Ø 50 mm / 110 mm	
Dimensions and weight		
Length x width x height	1 935 x 780 x 1 740 mm	
Net weight	765 kg	767 kg

Dimensions

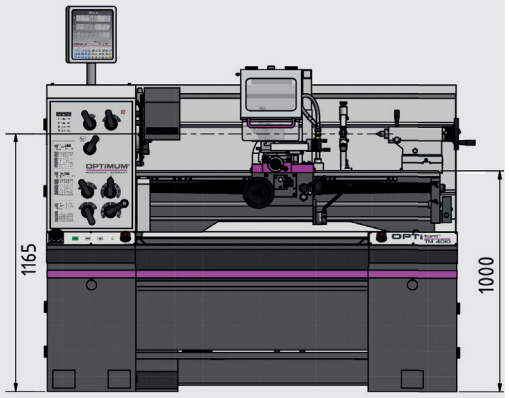

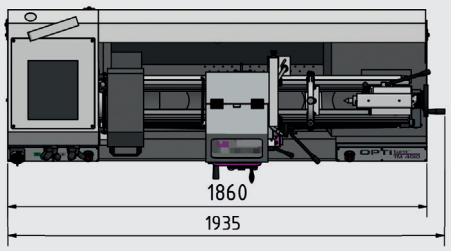

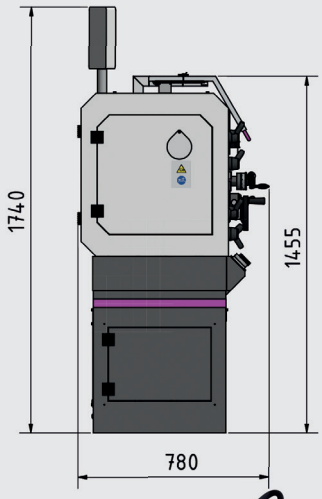

Lathe chuck	Article no.
BISON three-jaw lathe chuck Ø 200 mm no. 5 Centrically clamping (chuck flange 3450212 required)	3450210
BISON four-jaw lathe chuck Ø 250 mm no. 5 Centrically clamping (chuck flange 3450218 required)	3450216
› Information on lathe chucks from page 218	

Our recommendation

cleancraft
flexCAT 378 EOT-PRO
Article no. 7003380



Accessories	Article no.
Spare tool holder 20 x 100 type D for square chisels	3384304
Spare tool holder 30 x 100 type H for round chisels	3384322
Lathe tool set 16 mm, 11-part	3441604
Lathe tool set 16 mm, 5-part	3441668
Lathe tool set 16 mm, 5-part "Made in Germany"	3441216
Lathe tool set 16 mm, 5-part	3441610
› For information on lathe tool sets see page 224	
Clamping disc Ø 320 mm no. 5	3442979
Vibration-damping machine base SE55 (6 units required)	3352981
› More accessories for lathes from page 214	

Contents of package

- › Three-jaw lathe chuck Ø 200 mm, no. 5
- › Fixed steady Ø 7 - Ø 102 mm
- › Travelling steady Ø 10 - Ø 60 mm
- › LED machine lamp
- › Reduction sleeve MT6 - MT3
- › Non-travelling centre MT4
- › Quick change tool holder 3-E
- › Tool holder 20 x 100 type D for square chisels 18 mm
- › Machine initially filled with premium grade oil
- › Operating tool

*Important information on transport surcharges and explanations of packaging surcharges, data on TPFR, and „Operation of machines with frequency converters“ on page 323
(1) Please note that operators are required to make conversions in the event of installing third-party chucks or flanged chucks to reach the stated, technically possible rotating diameter.



WITH STEEL/CAST IRON CHASSIS

Visit our exhibition in Hallstadt/Bamberg

SIEMENS SINAMICS G 120D Frequency inverters

Information on the Vario lathes
TH 4210V / TH 4615V / TH 5620V / TX 5216V / TZ4V



DIN
Machines as per standard EN 61800

SINAMICS G120D
Brief overview of benefits

Highlights at a glance
Advanced safety function (STO, SLS)
STO - safe torque off as per EN 61800-5
SLS - Safely limited speed as per EN 61800-5

- Recovery, low circuit feedback
- Energy savings up to 20 %
- No brake resistors required
- Fast and easy diagnostic capability through LEDs
- Standardised plug connections throughout
- Rugged and flat design (IP65)
- EMC class C3 as per EN 61800-3
- Safety Integrated without encoder!
- More direct switch-over
- Faster braking
- Resilient to high overload

Siemens SAFETY INTEGRATED

- A comprehensive safety package that helps to protect both persons and machines. And in an extremely efficient and economic way thanks to complete integration of the safety functions in the control and drive technology. In addition, it ensures safe and practical operation of your machine under all required operating conditions. The safety functions meet the requirements of DIN EN 61508 for use up to and including SIL (Safety Integrity Level) 2 and categories 3 and PL (Performance Level) d as per DIN EN ISO 13849.

The feature scope includes, for example:

- Functions for safe monitoring of speed and standstill
- Direct connection of all safety-related signals and their internal logical links

LATHES

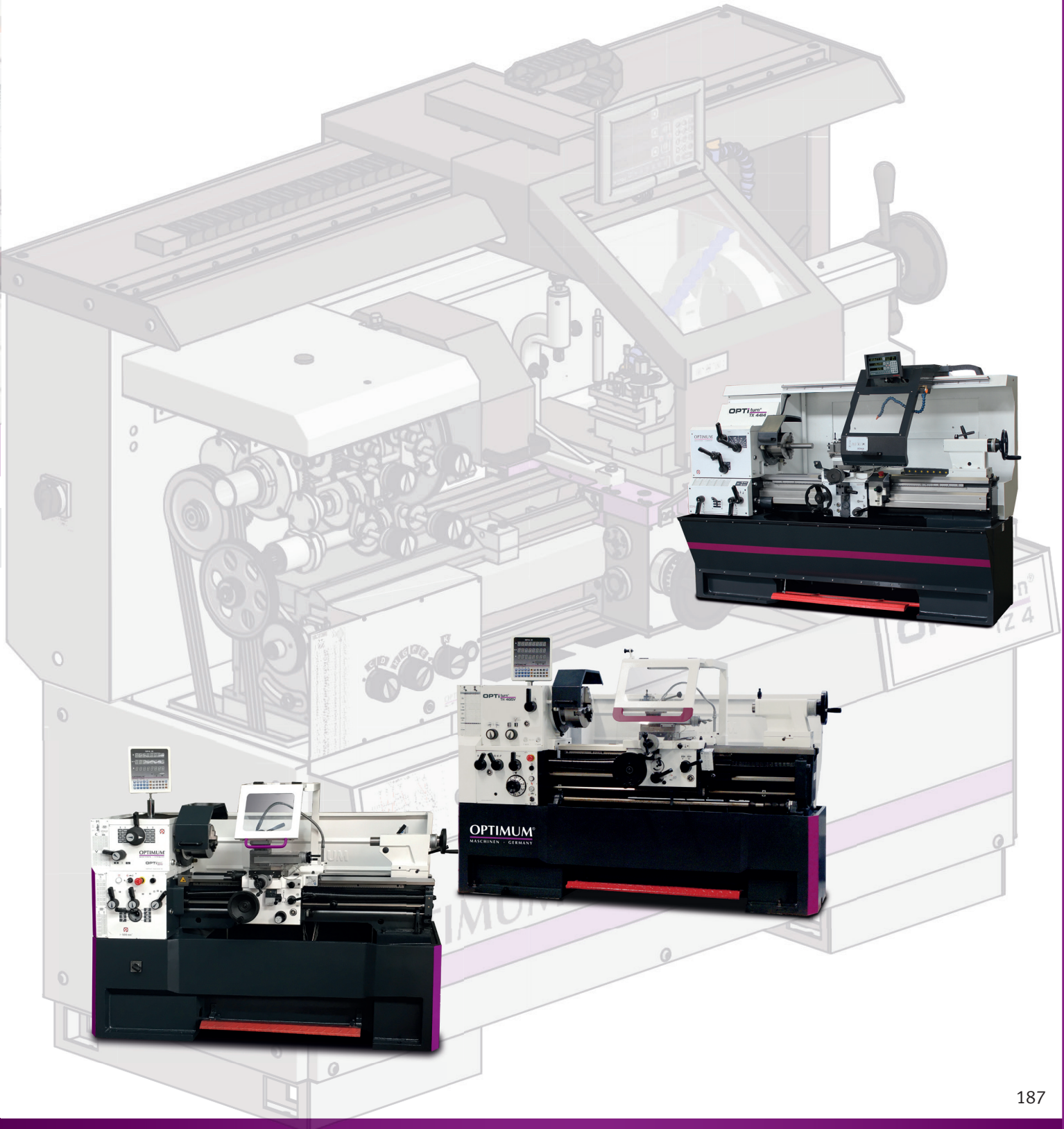

Precision feed and lead spindle lathes with digital position display NEWALL DP 700 and quick change tool holder

Facts that impress in terms of quality, performance and price

- Tempered and polished z-axis guideway
- Partly clad with travelling, generously dimensioned chip guard
- Travelling swarf guard with integrated position display, coolant hose and additional control panel
- Plane und top slide spindle tempered and ground, adjustable via split spindle nut
- Feed and lead screw cover
- Granular feed and tapping range
- LED machine light for complete elimination of the workspace
- Energy chain for material-friendly cable and hose guiding
- The default gear wheels for metric thread pitches and modular threads are already mounted in the machine. Interchangeable gears available as option for imperial and D.P threads
- Control cabinet with 24-V DC adapter
- Switch with lifecycle calculation, approved in line with EN ISO 13849
- Decoupled hand wheels approved in line with EN 23125
- Two-channel CW/CCW switch approved in line with EN 23125
- Safety hand wheels with release function in the X and Z axis
- Chip tray pulls out to front
- Coolant system
- Quick change tool holder SWH 5-B
- Tool holder 25 x 120 type D for square chisels 20 mm
- Motor circuit switch

Control cabinet



› 24 Volt DC power supply
› All contactors und relays by SIEMENS or Schneider

Touch panel



Centralised control
› For switching the lighting and coolant
› Switch for two-speed motor
› Foil keypad, easily cleanable

Bed geometry



› Flat angle
› Higher force absorption

Digital position display DP700
› Intuitive and user-friendly user interface
› Durable foil keyboard
(More informationen on page 234)



Fig.: TZ 4 - Shown with optional lathe chuck

GEAR DPA

Technical specifications, accessories and dimensions

Model	TZ 4
Article no.	3432240
Output	
Electrical connection	400 V / 3 Ph ~50 Hz
Total rated value	5 kW
Coolant pump motor	125 Watts
Spindle	
Drive motor	3 kW/4.5 kW
Spindle taper	MT6
Spindle holder	DIN ISO 702-1 No. 5 Form A2
Spindle bore, bar passage diameter	Ø 52 mm
Quick change tool holder	SWH 5-B
Work area	
Centre height	200 mm
Centre width	800 mm
Swing diameter over machine bed*	400 mm
Swing over cross slide	245 mm
Bed width	260 mm
Speed range	
Spindle speed	45 - 1 800 rpm
Number of speeds	16 speeds
Travel	
Top slide travel	112 mm
Cross slide travel	212 mm
Feeds and pitches	
Longitudinal feed within the range	0.026 - 1.84 mm/rev (48 feeds)
Cross feed within	0.013 - 0.93 mm/rev (48 feeds)
Pitch - metric in range	0.2 - 14 mm/rev (26 pitches)
Pitch - inch in range (Interchangeable gear set accessory Art no. 3444160)	80 - 1 turns/inch (42 pitches)
Modular thread in range	0.1 - 7 mm x π (44 thread)
Diametral pitch in range (Interchangeable gear set accessory Art no. 3444160)	3 - 200 turns/π (33 pitch)
Tailstock	
Tailstock seat	MT3
Spindle sleeve diameter / stroke	Ø 50 mm / 110 mm
Dimensions and weight	
Length x width x height	1 960 x 1 060 x 1 690 mm
Net weight	1 250 kg

Dimensions

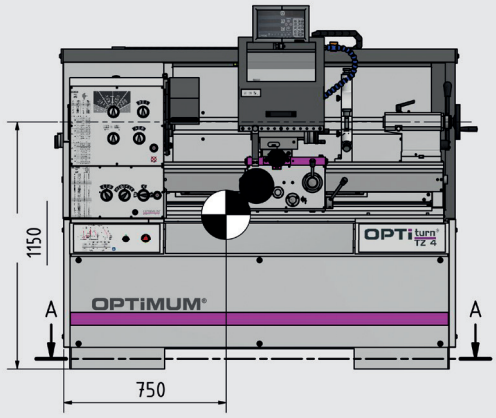

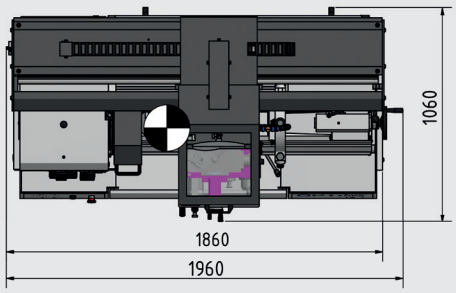

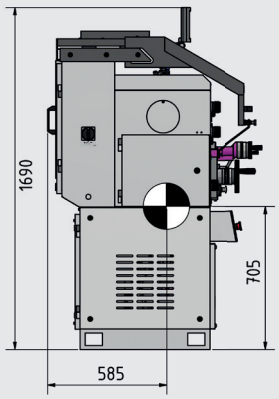

Lathe chuck	Article no.
BISON four-jaw lathe chuck Ø 250 mm no. 5 cast Centrically clamping (chuck flange 3450218 required)	3450216
Chuck flange for lathe chuck Ø 250 mm no. 5 (for lathe chuck 3450216)	3450218
BISON three-jaw lathe chuck Ø 200 mm no. 5 cast Centrically clamping (chuck flange 3450212 required)	3450210
Chuck flange for lathe chuck Ø 200 mm no. 5 (lathe chuck 3450210)	3450212

Accessories	Article no.
Clamping disc Ø 320 mm no. 5	3442979
BISON chuck flange for lathe chuck Ø 160 mm (Szf 3450245)	3450246
BISON collet chuck 16C - Ø 160 mm requires chuck flange 3450246)	3450245
Lathe tool set HM 25 mm, 5-part (see page 226)	3441623
Interchangeable gear set for imperial and D.P thread	3444160
Levelling platen SE 1 (8 units required)	3381012
› More accessories for lathes from page 214	

Follow this for the video presentation of our OPTIMUM TZ 4 lathe

YouTube

Remember to order a lathe chuck

Contents of package

- Steady rest passageway Ø 10 - Ø 130 mm
- Follow rest passageway Ø 10 - Ø 100 mm
- Reduction sleeve MT6 - MT3
- Non-travelling centre MT3
- Fixed, but temperature resistant centre MT3
- Quick change tool holder 5-B
- Tool holder 25 x 120 type D for square chisels 20 mm
- Machine initially filled with premium grade oil
- Operating tool

*For important details on operating machines with frequency converters, general instructions and explanations of packaging surcharges, data on TPFR, see page 323

Precision feed and lead spindle lathe with electronically controlled drive
and digital position display NEWALL DP 700

Facts that impress in terms of quality, performance and price

- Tempered and polished z-axis guideway
- Partly clad with travelling, generously dimensioned chip guard
- Travelling swarf guard with integrated position display, coolant hose and additional control panel
- Plane und top slide spindle tempered and ground, adjustable via split spindle nut
- Feed and lead screw cover
- Granular feed and tapping range
- LED machine light for complete elimination of the workspace
- Energy chain for material-friendly cable and hose guiding
- The default gear wheels for metric thread pitches and modular threads are already mounted in the machine. Interchangeable gears available as option for imperial and D.P threads
- Control cabinet with 24-V DC adapter
- Switch with lifecycle calculation, approved in line with EN ISO 13849
- Decoupled hand wheels approved in line with EN 23125
- Two-channel CW/CCW switch approved in line with EN 23125
- All contactors und relays by Siemens, Schneider or Eaton
- Safety hand wheels with release function in the X and Z axis
- Reduction of the main spindle braking time thanks to energy recuperation
- Chip tray pulls out to front
- Coolant system
- Quick change tool holder SWH 5-B
- Tool holder 25 x 120 type D for square chisels 20 mm

Siemens inverter



› **SINAMICS G120D**
› More information: „Siemens SINAMICS G 120D Frequency inverters“ on page 186

Touch panel



Centralised control
› For switching the lighting and coolant
› Foil keypad, easily cleanable

Bed geometry



› Flat angle
› Higher force absorption

Digital position display DP700
› Intuitive and user-friendly user interface
› Durable foil keyboard
(More informationen on page 234)



Fig.: TZ 4 - Shown with optional lathe chuck

Technical specifications, accessories and dimensions

GEAR DPA VARIO

Model	TZ 4V
Article no.	3432245
Output	
Electrical connection	400 V / 3 Ph ~50 Hz
Total rated value	6 kW
Coolant pump motor	125 Watts
Spindle	
Drive motor	5.5 kW
Spindle taper	MT6
Spindle holder	DIN ISO 702-1 No. 5 Form A2
Spindle bore, bar passage diameter	Ø 52 mm
Quick change tool holder	SWH 5-B
Work area	
Centre height	200 mm
Centre width	800 mm
Swing diameter over machine bed*	400 mm
Swing over cross slide	245 mm
Bed width	260 mm
Speed range	
Spindle speed	50 - 3 000 rpm
Number of speeds	2 speed, electrically controlled
Travel	
Top slide travel	112 mm
Cross slide travel	212 mm
Feeds and pitches	
Longitudinal feed within the range	0.0263 - 1.8416 mm/rev (48 feeds)
Cross feed within	0.0133 - 0.9321 mm/rev (48 feeds)
Pitch - metric in range	0.2 - 14 mm/rev (26 pitches)
Pitch - inch in range (Interchangeable gear set accessory Art no. 3444160)	80 - 1 turns/inch (42 pitches)
Modular thread in range	0.1 - 7 mm x π (44 thread)
Diametral pitch in range (Interchangeable gear set accessory Art no. 3444160)	3 - 200 turns/π (33 pitch)
Tailstock	
Tailstock seat	MT3
Spindle sleeve diameter / stroke	Ø 50 mm / 110 mm
Dimensions and weight	
Length x width x height	1 960 x 1 060 x 1 690 mm
Net weight	1 250 kg

Dimensions

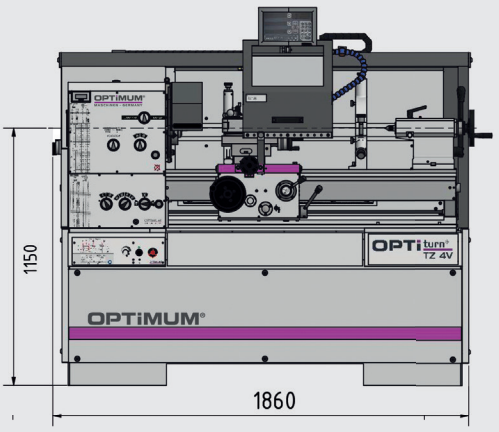

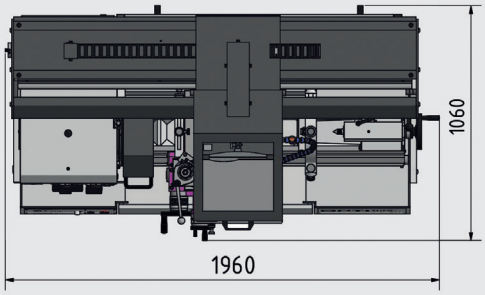

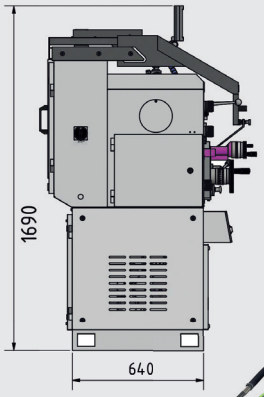

Lathe chuck	Article no.
BISON four-jaw lathe chuck Ø 250 mm no. 5 steel Centrically clamping (chuck flange 3450218 required)	3450217
Chuck flange for lathe chuck Ø 250 mm no. 5 (for lathe chuck 3450218)	3450218
BISON three-jaw lathe chuck Ø 200 mm no. 5 cast Centrically clamping (chuck flange 3450212 required)	3450210
Chuck flange lathe chuck Ø 200 mm no. 5 (lathe chuck 3450210)	3450212

Accessories	Article no.
Clamping disc Ø 320 mm no. 5	3442979
BISON chuck flange for lathe chuck Ø 160 mm (Szf 3450245)	3450246
BISON collet chuck 16C - Ø 160 mm (requires chuck flange 3450246)	3450245
Lathe tool set HM 25 mm, 5-part (see page 226)	3441623
Interchangeable gear set for imperial and D.P thread	3444160
Levelling platen SE 1 (8 units required)	3381012
› More accessories for lathes from page 214	

Our recommendation

cleancraft
flexCAT 378 EOT-PRO
Article no. 7003380



Remember to order a lathe chuck

Contents of package

- › Steady rest passageway Ø 10 - Ø 130 mm
- › Follow rest passageway Ø 10 - Ø 100 mm
- › Reduction sleeve MT6 - MT3
- › Non-travelling centre MT3
- › Fixed, but temperature resistant centre MT3
- › Quick change tool holder 5-B
- › Tool holder 25 x 120 type D for square chisels 20 mm
- › Machine initially filled with premium grade oil
- › Operating tool

*For important details on operating machines with frequency converters, general instructions and explanations of packaging surcharges, data on TPFR, see page 323
The lathe (frequency converter) complies with the DIN EN 55011 standard: class C3

INDUSTRY

Precision leading and feed spindle machines, mature technology, fully equipped, easy to operate.

TH 4210D / TH 4215D with DPA 21 digital position display

Facts that impress in terms of quality, performance and price

- Tempered and polished z-axis guideway
- Spindle collet Camlock DIN ISO 702-2 no. 6
- Precision slide
- Hand wheels with adjustable fine scaling 0.04 / 0.02 mm
- All guides adjustable using cleats
- Adjustment range top slide ± 90°
- Guaranteed concentricity of spindle nose better than 0.015 mm
- Main spindle runs in oil bath
- Gearwheels smooth running, tempered and ground borne on 2 re-adjustable precision taper rollers
- Two-channel CW/CCW switch approved in line with EN 23125
- Switch with lifecycle calculation, approved in line with EN ISO 13849
- All metric pitches in range from 0.2 to 14 mm/rev and all inch pitches in range of 72 - 2 turns per inch configurable on control panel without replacing the interchangeable gear wheels thanks to gear shift
- Clockwise/anti-clockwise rotation switchable on bed slide, switchable via switching spindle
- Central lubrication in bed slide
- Leading spindle cover
- Safety hand wheels with release function acc. to EN23125 in the X and Z axis
- Tailstock adjustable ± 10 mm for turning spheres
- Tailstock spindle sleeve and handwheel with adjustable fine scaling 0.025 mm
- Fast, easy adjustment of the tailstock without tools thanks to clamping lever
- Grey cast iron prism bed with strong ribbing, induction tempered and precision ground
- LED machine lamp in chip guard
- Coolant system featuring separate coolant tank, fill level display and oil trap; easy and complete draining and cleaning as per DIN
- Chassis and machine bed single-piece cast meehanite
- Emergency stop device with foot pedal
- Quadruple tool holder

Control cabinet



› 24 Volt DC power supply
› All contactors und relays by SIEMENS or Schneider

TH 4210D / TH 4215D
Dig. Position display DPA 21



› User-friendly membrane keyboard, splash water protected, sealed and dazzle free
› Sensor supplied for acquiring spindle speeds



Fig.: TH 4210D - Shown with optional lathe chuck

GEAR DPA

Technical specifications, accessories and dimensions

Model	TH 4210	
Article no.	3462050	
Model	**TH 4210D**	**TH 4215D**
Article no.	3462055	3462070
Output		
Electrical connection	400 V / 3 Ph ~50 Hz	
Total rated value	4.6 kW	
Coolant pump motor	100 W	
Spindle		
Drive motor	3 kW / 4.5 kW	
Spindle taper	MT6	
Spindle holder	Camlock DIN ISO 702-2 No. 6	
Spindle bore, bar passage diameter	Ø 52 mm	
Quick change tool holder height	20 mm	
Work area		
Centre height	210 mm	
Centre width	1 000 mm	1 500 mm
Swing diameter over machine bed*	420 mm	
Swing over cross slide	250 mm	
Bed width	250 mm	
Swing without bed bridge	590 mm	
Turning length in bed bridge	260 mm	
Speed range		
Spindle speed	45 - 1 800 rpm	
Number of speeds	16 speeds	
Travel		
Top slide travel	140 mm	
Cross slide travel	230 mm	
Feeds and pitches		
Longitudinal feed within the range	0.05 - 1.7 mm/rev (17 feeds)	
Cross feed within	0.025 - 0.85 mm/rev (17 feeds)	
Pitch - metric in range	0.2 - 14 mm/rev (39 pitches)	
Pitch - inch in range	72 - 2 turns/inch (45 pitches)	
Diametral pitch in range	8 - 44 turns/π (21 pitch)	
Modular thread in range	0.3 - 3.5 mm x π (18 thread)	
Tailstock		
Tailstock seat	MT4	
Tailstock spindle sleeve diameter / stroke	Ø 50 mm / 120 mm	
Dimensions and weight		
Length	1 940 mm	2,440 mm
Width x height	915 x 1 375 (DPA 1 600) mm	
Net weight	1 160 kg	1 340 kg
Net weight with DPA 21	1 162 kg	

Dimensions

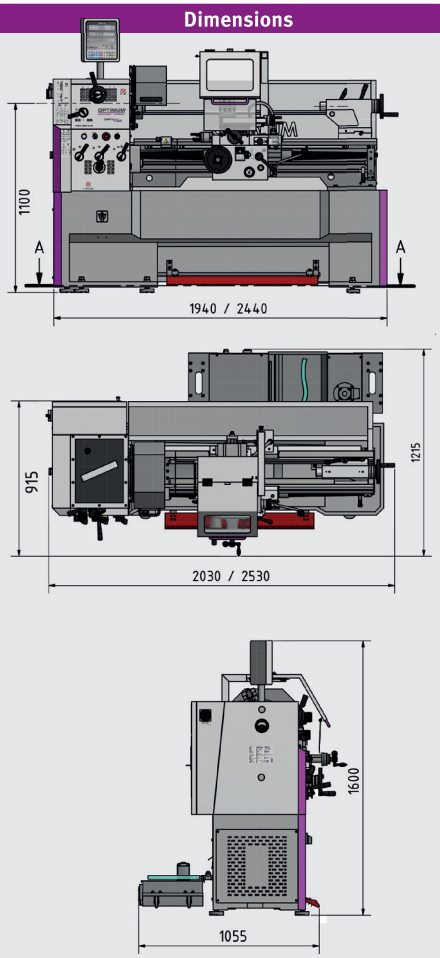

Remember to order a lathe chuck

Contents of package
› Steady rest passageway Ø 10 - Ø 130 mm
› Follow rest passageway Ø 10 - Ø 100 mm
› LED machine lamp
› Reduction sleeve MT6 - MT4
› Non-travelling centre MT4
› Fixed, but temperature resistant centre MT4
› Quad tool holder max. 20 mm
› Interchangeable gear set
› Gear wheels for threading gauge (metric)
› Machine initially filled with premium grade oil
› Operating tool

Lathe chuck	Article no.
OPTIMUM lathe chucks cast iron Ø 250 mm No. 6	
Three-jaw lathe chuck, centric	3442765
Four-jaw lathe chuck, centric	3442852
Four-jaw lathe chuck, single	3442884
BISON lathe chuck Ø 250 mm no. 6	
Three-jaw lathe chuck, centric	3450330
Four-jaw lathe chuck, cast, centric	3450380
Three-jaw lathe chuck, steel, centric	3450530
Four-jaw lathe chuck, steel, centric	3450580
› Information on lathe chucks from page 218	

Accessories	Article no.
Quick change tool holder SWH 5-B	3384305
Factory assembly SWH 5-B	9000400
Spare tool holder 25 x 120 Type D for square	3384306
Spare tool holder 32 x 130 type H for round chisels	3384324
Lathe tool set HM 20 mm, 5-part	3441670
Lathe tool set HM 20 mm, 5-part	3441617
› For information on lathe tool sets see page 225	
Vibration damping machine base SE 85 (6 units)	3352982
Universal collet chuck device 5C	3441507
› More accessories for lathes from page 214	

*For important details on operating machines with frequency converters, general instructions and explanations of packaging surcharges, data on TPFR, see page 323

Precision leading and feed spindle machines, mature technology, fully equipped, easy to operate. Featuring Siemens inverter Vario drive

Facts that impress in terms of quality, performance and price

- Tempered and polished z-axis guideway
- Grey cast iron prism bed with strong ribbing, induction tempered and precision ground
- Spindle collet Camlock DIN ISO 702-2 no. 6
- Precision slide
- Hand wheels with adjustable fine scaling 0.04 / 0.02 mm
- All guides adjustable using cleats
- Adjustment range top slide ± 90°
- Guaranteed concentricity of spindle nose better than 0.015 mm
- Main spindle runs in oil bath
- Gearwheels smooth running, tempered and ground borne on 2 re-adjustable precision taper rollers
- Two-channel CW/CCW switch approved in line with EN 23125
- Switch with lifecycle calculation, approved in line with EN ISO 13849
- All metric pitches in range from 0.2 to 14 mm/rev and all inch pitches in range of 72 - 2 turns per inch configurable on control panel without replacing the interchangeable gear wheels thanks to gear shift
- Clockwise/anti-clockwise rotation switchable on bed slide, switchable via switching spindle
- Central lubrication in bed slide
- Leading spindle cover
- Safety hand wheels with release function acc. to EN23125 in the X and Z axis
- Speed monitoring in line with Machinery Directive
- Tailstock adjustable ± 10 mm for turning spheres
- Tailstock spindle sleeve and handwheel with adjustable fine scaling 0.025 mm
- Fast, easy adjustment of the tailstock without tools thanks to clamping lever
- Coolant system featuring separate coolant tank, fill level display and oil trap; easy and complete draining and cleaning as per DIN
- LED machine lamp in chip guard
- Chassis and machine bed single-piece cast meehanite
- Emergency stop device with foot pedal
- Quick change tool holder 5-B included in standard scope of delivery
- Tool holder 25 x 120 type D for square chisels 20 mm included in standard scope of delivery

SIEMENS inverter



› **SINAMICS G120D**
› More information: „Siemens SINAMICS G 120D Frequency inverters“ on page 174

Control cabinet



› 24 Volt DC power supply
› All contactors und relays by SIEMENS or Schneider

Digital position display DPA 21

› User-friendly membrane keyboard, splash water protected, sealed and dazzle free
› Rev counter

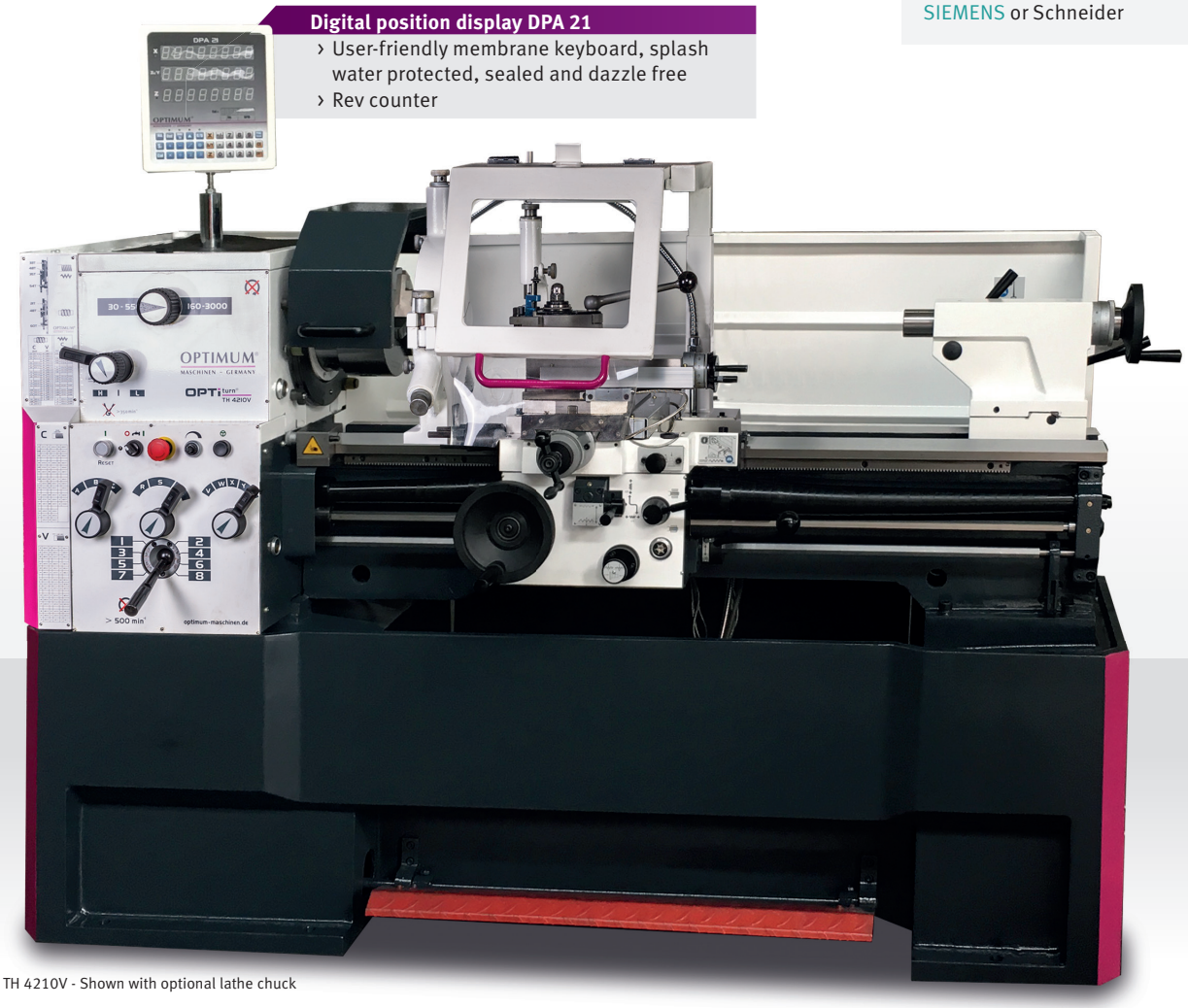

Fig.: TH 4210V - Shown with optional lathe chuck

GEAR DPA VARIO

Technical specifications, accessories and dimensions

Model	TH 4210V
Article no.	3462060
Output	
Electrical connection	400 V / 3 Ph ~50 Hz
Total rated value	5.6 kW
Coolant pump motor	100 W
Spindle	
Drive motor	5.5 kW
Spindle taper	MT6
Spindle holder	Camlock DIN ISO 702-2 No. 6
Spindle bore, bar passage diameter	Ø 52 mm
Quick change tool holder	SWH 5-B
Quick change tool holder height	25 mm
Work area	
Centre height	210 mm
Centre width	1 000 mm
Swing diameter over machine bed*	420 mm
Swing over cross slide	250 mm
Bed width	250 mm
Swing without bed bridge	590 mm
Turning length in bed bridge	260 mm
Speed range	
Spindle speed	30 - 3 000 rpm
Number of speeds	2 gears, electronically controlled
Travel	
Top slide travel	140 mm
Cross slide travel	230 mm
Feeds and pitches	
Longitudinal feed within the range	0.05 - 1.7 mm/rev (17 feeds)
Cross feed within	0.025 - 0.85 mm/rev (17 feeds)
Pitch - metric in range	0.2 - 14 mm/rev (39 pitches)
Pitch - inch in range	72 - 2 turns/inch (45 pitches)
Diametral pitch in range	8 - 44 turns/π (21 pitch)
Modular thread in range	0.3 - 3.5 mm x π (18 thread)
Tailstock	
Tailstock seat	MT4
Tailstock spindle sleeve diameter / stroke	Ø 50 mm / 120 mm
Dimensions and weight	
Length x width x height	2 031 x 915 (coolant tank 1 215) x 1 415 (DPA 1 600) mm
Net weight	1 162 kg

Dimensions

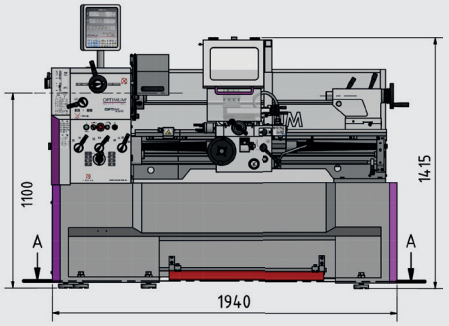

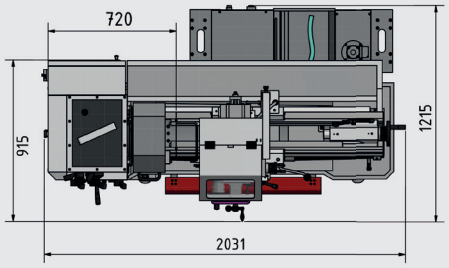

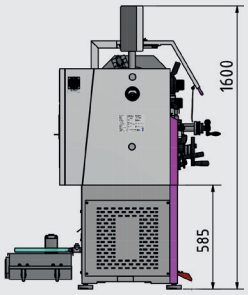

Remember to order a lathe chuck

Contents of package

- Steady rest passageway Ø 10 - Ø 130 mm
- Follow rest passageway Ø 10 - Ø 100 mm
- LED machine lamp
- Reduction sleeve MT6 - MT4
- Non-travelling centre MT4
- Quick change tool holder 5-B
- Tool holder 25 x 120 type D for square chisels 20 mm
- Interchangeable gear set
- Position stop with granular adjustment
- Machine initially filled with premium grade oil
- Operating tool

Accessories	Article no.
Quick change tool holder SWH 5-B	3384305
Factory assembly SWH 5-B	9000400
Spare tool holder 25 x 120 Type D for square	3384306
Spare tool holder 32 x 130 type H for round chisels	3384324
Lathe tool set HM 25 mm, 5-part	3441672
Lathe tool set HM 25 mm, 5-part, extension kit	3441623
Lathe tool set HM 20 mm, 5-part	3441670
Lathe tool set HM 20 mm, 5-part, extension kit	3441617
› For information on lathe tool sets see page 225	
Vibration damping machine base SE 85 (6 units required)	3352982
Clamping block set 20-05	3440654
› More accessories for lathes from page 214	

Lathe chuck	Article no.
OPTIMUM lathe chucks Ø 250 mm No. 6	
Three-jaw lathe chuck, centric	3442765
Four-jaw lathe chuck, centric	3442852
Four-jaw lathe chuck, single	3442884
BISON lathe chuck Ø 250 mm No. 6	
Three-jaw lathe chuck, centric	3450330
Four-jaw lathe chuck, centric	3450380
Three-jaw lathe chuck, steel	3450530
Four-jaw lathe chuck, steel	3450580
› Information on lathe chucks from page 218	

*For important details on operating machines with frequency converters, general instructions and explanations of packaging surcharges, data on TPFR, see page 323
The lathe (frequency converter) complies with the DIN EN 55011 standard: class C3

OPTIturn® TX 4414

NEW

INDUSTRY

Precision feed and lead spindle lathe complies with strictest requirements in terms of technical equipment and precision. With digital position display NEWALL DP 700

Facts that impress in terms of quality, performance and price

- Machine bed and chassis made heavily ribbed cast material
- Single-part steel machine chassis
- High degrees of rigidity of the spindle bar housing thanks to strong ribbed 25GG cast material
- Precision slide
- shafts on needle bearings, all components lubricated in oil bath
- Hardened and polished bed guides
- All electronic controls centrally accessible
- All feed gearwheels made of steel, hardened and polished
- Hand wheels decoupled and approved in line with EN 23125
- Two-channel CW/CCW switch approved in line with EN 23125
- Switch with lifecycle calculation, approved in line with EN ISO 13849
- Coolant system featuring separate coolant tank, fill level display and oil trap; easy and complete draining and cleaning as per DIN
- Complete feed and lead spindle cover
- Working area completely illuminated
- Easy to service thanks to removable rear panel
- Hardened and polished spindle guarantees high degrees of accuracy and durability
- The powerful machining performance means that a high level of chip removal during roughing work is no problem
- Energy chain for material-friendly cable and hose guiding
- Lockable chip guard moves with the bed slide with integrated position indicator and coolant hose, manually adjustable
- No interchangeable gears required
- With safety device to prevent simultaneous operation of thread cutting and pitch mechanism
- Electronically braked motor
- Electronic feed shut-off of Z axis
- Electrical position shut-off with quadruple positioning stop
- Three-jaw lathe chuck included in standard scope of delivery
- Quick change tool holder SWH 5-B included in standard scope of delivery

Control cabinet



› 24 Volt DC power supply
› All contactors und relays by SIEMENS or Schneider

Touch panel



Centralised control
› Machine lamp
› Coolant
› Feed bar drive

Dig. Position display DPA 700



› Intuitive and user-friendly user interface
(More information see page 234)

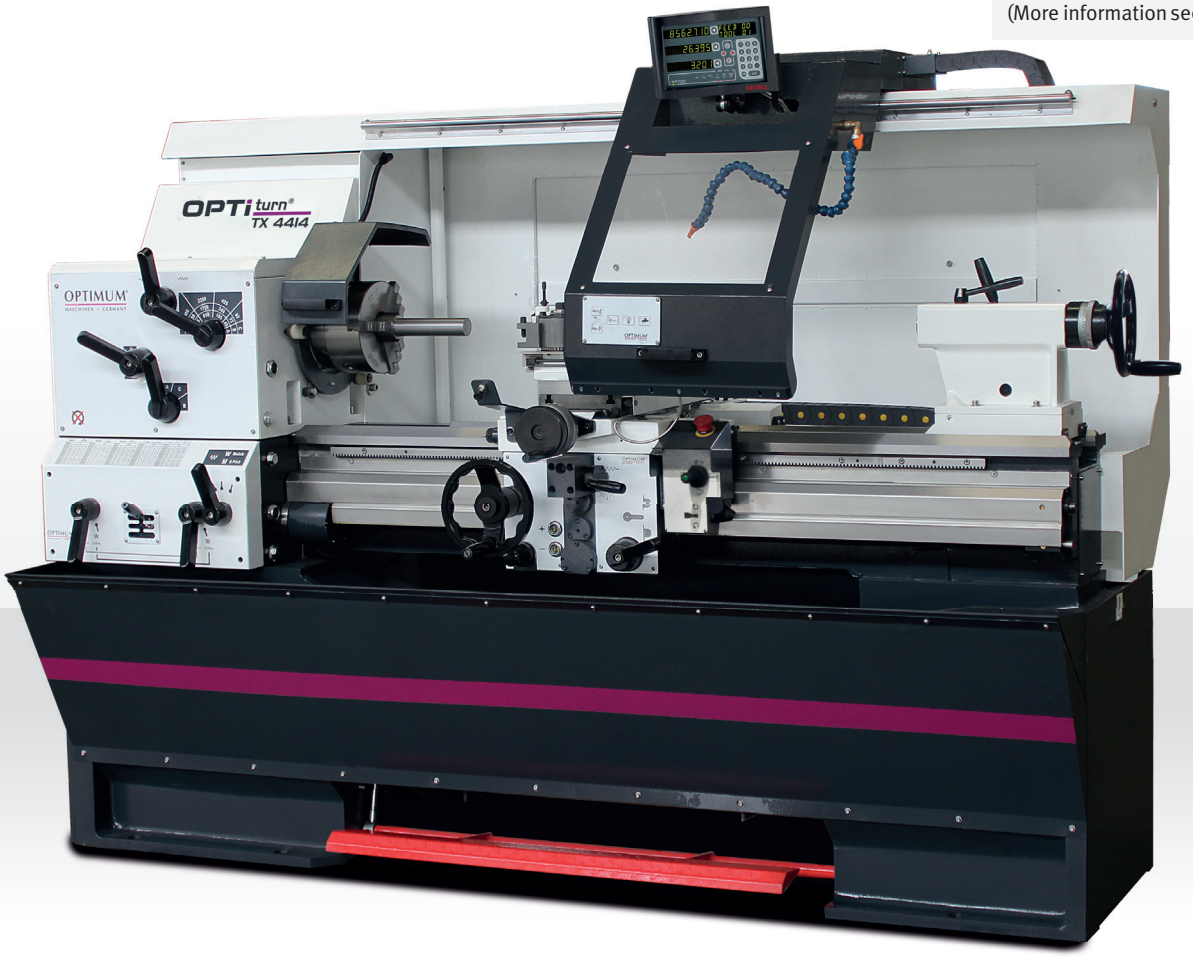

GEAR DPA

Technical specifications, accessories and dimensions

Model	TX 4414
Article no.	3432420
Output	
Electrical connection	400 V / 3 Ph ~50 Hz
Total rated value	6.1 kW
Coolant pump motor	100 W
Spindle	
Drive motor	5.5 kW
Spindle taper	MT6
Spindle holder	Camlock DIN ISO 702-2 No. 6
Spindle bore, bar passage diameter	Ø 52 mm
Quick change tool holder	SWH 5-B
Work area	
Centre height	220 mm
Centre width	1 280 mm
Swing diameter over machine bed*	440 mm
Swing over cross slide	250 mm
Bed width	300 mm
Speed range	
Spindle speed	40 - 2 200 rpm
Number of speeds	12 speeds
Travel	
Top slide travel	153 mm
Cross slide travel	290 mm
Feeds and pitches	
Longitudinal feed within the range	0.05 - 0.752 mm/rev. (44 St)
Cross feed within	0.025 - 0.376 mm/rev. (44 St)
Metric pitch	0.5 - 7.5 mm/rev. (44 St)
Pitch - inch in range	60 - 4 hel./inch (44 St)
Diametral pitch in range	0.25 - 3.75 mm x π (44 St)
Modular thread in range	120 - 8 hel./π (44 St)
Tailstock	
Tailstock seat	MT4
Tailstock- sleeve diameter/ sleeve travel	Ø 58 mm/ 180 mm
Dimensions and weight	
Length x width x height	2,410 x 1,085 x 1,825 mm
Net weight	1,630 kg

Dimensions

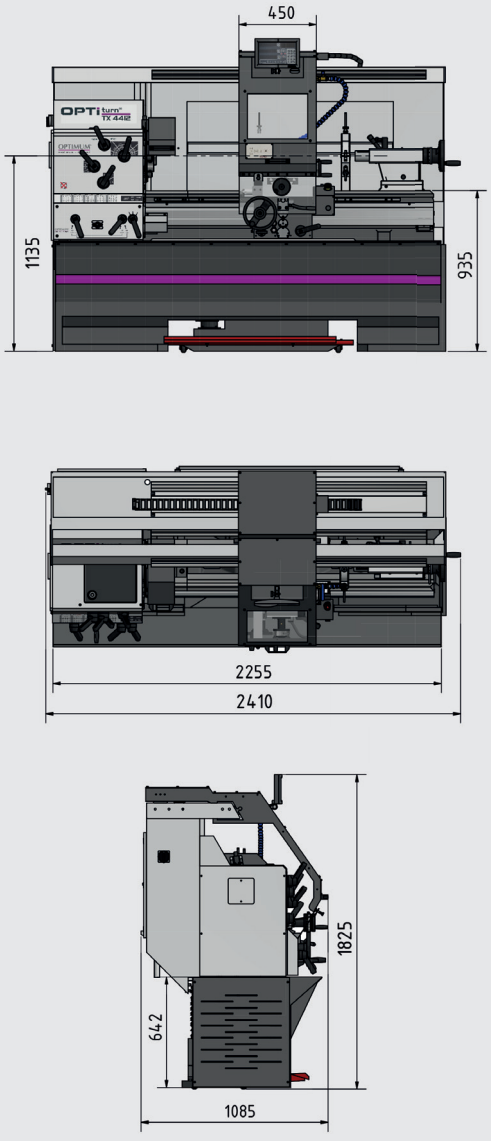

Lathe chuck Ø 200 mm Camlock No. 6	Article no.
OPTIMUM Four-jaw lathe chuck, centric	3442846
BISON Four-jaw lathe chuck, centric	3450370
› Information on lathe chucks from page 218	


Fig.: Fixed steady


Fig.: Travelling steady

Accessories	Article no.
Follow rest passageway Ø 10 - Ø 170 mm	3438015
Steady rest passageway Ø 15 - Ø 165 mm	3438017
Clamping disc Ø 350 mm Camlock DIN ISO 702-2 No. 6	3442980
Travelling centre MT4	3440704
BISON co-travelling centre MT4	3451004
Vibration damping machine base SE 85 (6 units required)	3352982
› More accessories for lathes from page 214	

Our recommendation

cleancraft
flexCAT 378 EOT-PRO
Article no. 7003380



Contents of package

- Three-jaw lathe chuck Ø 200 mm no. 6
- Two non-travelling centres MT3 and MT5
- Reduction sleeve MT6 - MT5
- Quick change tool holder SWH 5-B
- Machine initially filled with premium grade oil
- Operating tool

*For important details on operating machines with frequency converters, general instructions and explanations of packaging surcharges, data on TPFR, see page 323

INDUSTRY

Precision leading and feed spindle lathes – unique in terms of precision and control. With DPA 21 digital position display and quick change tool holder

Facts that impress in terms of quality, performance and price

- Tempered and polished z-axis guideway
- Precision slide
- Hand wheels with adjustable fine scaling 0.04 / 0.02 mm
- All guides adjustable using cleats
- Shafts, gears and main spindle run in oil bath
- Adjustment range top slide ± 90°
- Guaranteed concentricity of spindle nose better than 0.015 mm
- Gearwheels smooth running, tempered and ground borne on 2 re-adjustable precision taper rollers
- Quick-switching feed gear with closed design, gears and shafts tempered and ground, running in oil bath on precision bearings
- Two-channel CW/CCW switch approved in line with EN 23125
- Switch with lifecycle calculation, approved in line with EN ISO 13849
- Clockwise/anti-clockwise rotation switchable on bed slide, switchable via switching spindle
- Mechanical longitudinal feed switch-off of bed slide with four configurable eccentrics
- Leading spindle cover
- Safety hand wheels with release function acc. to EN23125 in the X and Z axis
- Scale on thread gauge adjustable
- Central lubrication in bed slide
- Tailstock adjustable ± 10 mm for turning spheres
- Tailstock spindle sleeve and handwheel with adjustable fine scaling 0.025 mm
- Fast, easy adjustment of the tailstock without tools thanks to clamping lever
- Grey cast iron prism bed with strong ribbing, induction tempered and precision ground
- Coolant system featuring separate coolant tank, fill level display and oil trap; easy and complete draining and cleaning as per DIN
- Generously dimensioned chip guard with integrated LED machine lamp
- Emergency stop device with foot pedal
- Quick change tool holder 5-B included in standard scope of delivery
- Tool holder 25 x 120 type D for square chisels 20 mm included in standard scope of delivery

Control cabinet

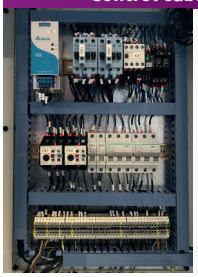

› 24 Volt DC power supply
› All contactors und relays by SIEMENS or Schneider

Dig. Position display DPA 21



› User-friendly membrane keyboard, splash water protected, sealed and dazzle free

as of TH 4615: energy chain



› for routing that is easy on the cable and hose material

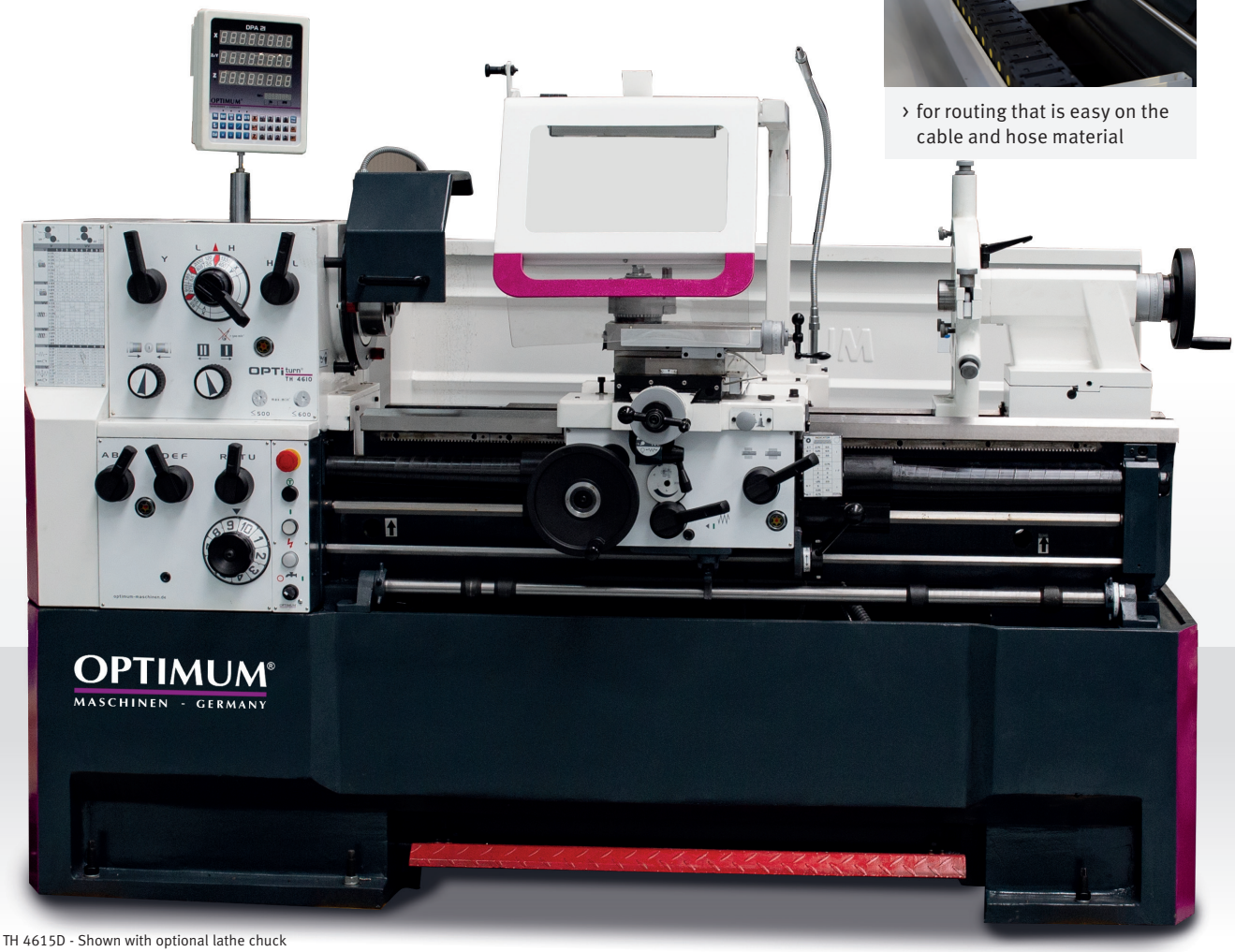

Fig.: TH 4615D - Shown with optional lathe chuck

Technical specifications, accessories and dimensions

Model	TH 4610D	TH 4615D	TH 4620D
Article no.	3462110	3462120	3462130
Output			
Electrical connection	400 V / 3 Ph ~50 Hz		
Total rated value	5.8 kW		
Coolant pump motor	125 Watts		
Spindle			
Drive motor	5.5 kW		
Spindle taper	MT6		
Spindle holder	Camlock DIN ISO 702-2 No. 6		
Spindle bore, bar passage diameter	Ø 58 mm		
Quick change tool holder	SWH 5-B		
Work area			
Centre height	230 mm		
Centre width	1 060 mm	1 560 mm	2 060 mm
Swing diameter over machine bed*	460 mm		
Swing over cross slide	270 mm		
Bed width	300 mm		
Swing without bed bridge	690 mm		
Turning length in bed bridge	240 mm		
Speed range			
Spindle speed	25 - 2 000 rpm		
Number of speeds	12 speeds		
Travel			
Top slide travel	125 mm		
Cross slide travel	285 mm		
Feeds and pitches			
Longitudinal feed within the range	0.031 - 1.7 mm/rev (42 feeds)		
Cross feed within	0.014 - 0.784 mm/rev (42 feed rates)		
Pitch - metric in range	0.1 - 14 mm/rev (41 pitches)		
Pitch - inch in range	112 - 2 turns/inch (41 pitches)		
Diametral pitch in range	4 - 112 turns/π (50 thread)		
Modular thread in range	0.1 - 7 mm x π (34 thread)		
Tailstock			
Tailstock seat	MT4		
Spindle sleeve diameter / stroke	Ø 60 mm / 130 mm		
Dimensions and weight			
Length	2 215 mm	2 765 mm	3 265 mm
Width x height	1 065 x 1 550 mm		
Net weight	1 645 kg	1 810 kg	1 965 kg

Dimensions

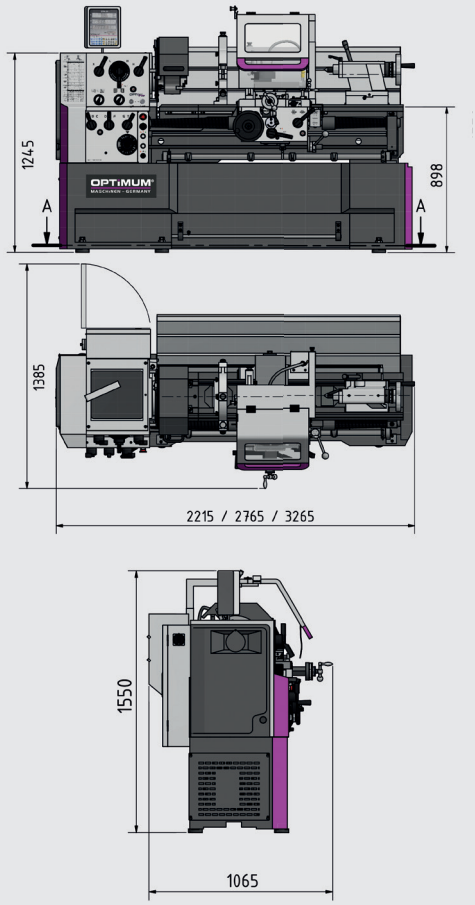

Remember to order a lathe chuck

Contents of package
› Steady rest passageway Ø 25 - Ø 178 mm
› Follow rest passageway Ø 19 - Ø 114 mm
› LED machine lamp
› Reduction sleeve MT6 / MT4
› Non-travelling centre MT4
› Fixed, but temperature resistant centre MT4
› Quick change tool holder 5-B
› Tool holder 25 x 120 type D for square chisels 20 mm
› Thread gauge
› Interchangeable gear set
› Gear wheels for threading gauge (metric)
› Machine initially filled with premium grade oil
› Operating tool

Accessories	Article no.
Spare tool holder 25 x 120 Type D for square	3384306
Spare tool holder 32 x 130 type H for round chisels	3384324
Lathe tool set HM 20 mm, 5-part	3441670
Lathe tool set HM 20 mm, 5-part, extension kit	3441617
› For information on lathe tool sets see page 225	
Clamping disc Ø 350 mm no. 6	3442980
Universal collet chuck device 5C	3441507
Collet kit 3 - 25 mm, 5C, 17-part	3441509
Levelling platen SE 3 (6 units required)	3381018
Collet chuck 5C - Camlock no. 6	3441556
Position stop with granular adjustment	3444022
› More accessories for lathes from page 214	

Lathe chuck	Article no.
OPTIMUM lathe chucks Ø 250 mm No. 6	
Three-jaw lathe chuck, centric	3442765
Four-jaw lathe chuck, centric	3442852
BISON lathe chuck Ø 250 mm No. 6	
Three-jaw lathe chuck, centric	3450330
Four-jaw lathe chuck, centric	3450380
› Information on lathe chucks from page 218	

*For important details on operating machines with frequency converters, general instructions and explanations of packaging surcharges, data on TPFR, see page 323

INDUSTRY

Precision feed and lead spindle lathe – unique in terms of precision and operation with Siemens inverter Vario drive

Facts that impress in terms of quality, performance and price

- Tempered and polished z-axis guideway
- Precision slide
- Hand wheels with adjustable fine scaling 0.04 / 0.02 mm
- All guides adjustable using cleats
- Shafts, gears and main spindle run in oil bath
- Adjustment range top slide ± 90°
- Guaranteed concentricity of spindle nose better than 0.015 mm
- Gearwheels smooth running, tempered and ground borne on 2 re-adjustable precision taper rollers
- Quick-switching feed gear with closed design, gears and shafts tempered and ground, running in oil bath on precision bearings
- Two-channel CW/CCW switch approved in line with EN 23125
- Switch with lifecycle calculation, approved in line with EN ISO 13849
- Clockwise/anti-clockwise rotation switchable on bed slide, switchable via switching spindle
- Mechanical longitudinal feed switch-off of bed slide with four configurable eccentrics
- Leading spindle cover
- Emergency stop device with foot pedal
- Safety hand wheels with release function acc. to EN23125 in the X and Z axis
- Scale on thread gauge adjustable
- Central lubrication in bed slide
- Tailstock adjustable ± 10 mm for turning spheres
- Tailstock spindle sleeve and handwheel with adjustable fine scaling 0.025 mm
- Fast, easy adjustment without tools thanks to clamping lever
- Grey cast iron prism bed with strong ribbing, induction tempered and precision ground
- Coolant system featuring separate coolant tank, fill level display and oil trap; easy and complete draining and cleaning as per DIN
- Generously dimensioned chip guard with integrated LED machine lamp
- Quick change tool holder SWH 5-B
- Tool holder 25 x 120 type D for square chisels 20 mm
- Digital position display DPA 21 with speed display
- Lines routed in energy chain

Siemens inverter

Made in EU



› **SINAMICS G120D**
› More information: „Siemens SINAMICS G 120D Frequency inverters“ on page 186

Control cabinet

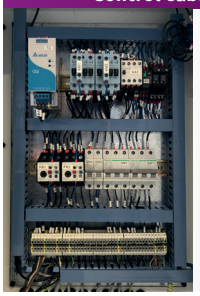

› 24 Volt DC power supply
› All contactors und relays by SIEMENS, Schneider or Eaton

Dig. Position display DPA 21



› User-friendly membrane keyboard, splash water protected, sealed and dazzle free

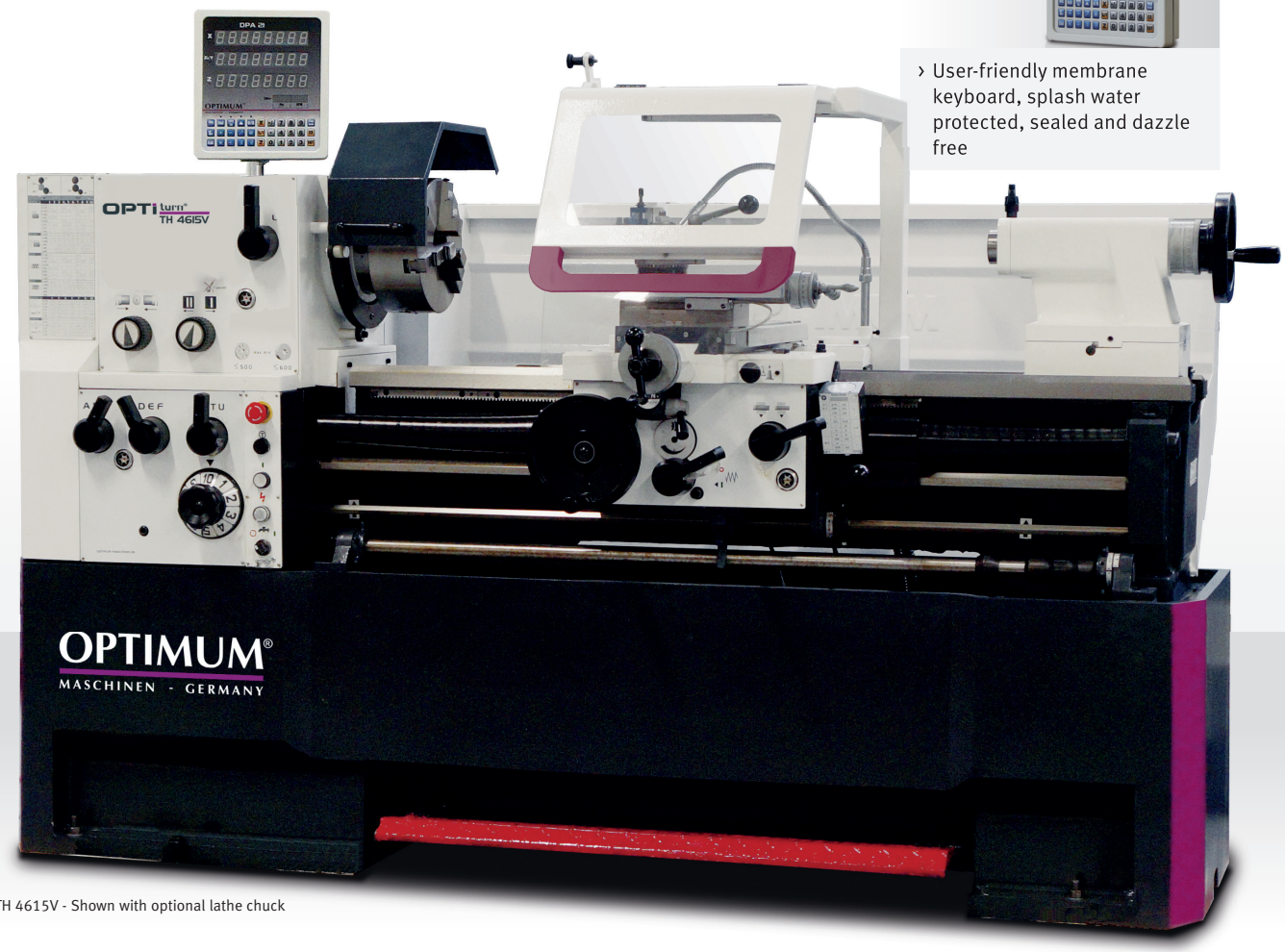

Fig.: TH 4615V - Shown with optional lathe chuck

Technical specifications, accessories and dimensions

GEAR DPA VARIO

Model	TH 4615V
Article no.	3462125
Output	
Electrical connection	400 V / 3 Ph ~50 Hz
Total rated value	8.5 kW
Coolant pump motor	125 Watts
Spindle	
Drive motor	7.5 kW
Spindle taper	MT7
Spindle holder	Camlock DIN ISO 702-2 No. 8
Spindle bore, bar passage diameter	Ø 80 mm
Quick change tool holder	SWH 5-B
Work area	
Centre height	230 mm
Centre width	1 560 mm
Swing diameter over machine bed*	460 mm
Swing over cross slide	270 mm
Bed width	300 mm
Swing without bed bridge	690 mm
Turning length in bed bridge	240 mm
Speed range	
Spindle speed	30 - 2 000 rpm
Number of speeds	2 speeds, electronically controlled
Travel	
Top slide travel	125 mm
Cross slide travel	285 mm
Feeds and pitches	
Longitudinal feed within the range	0.031 - 1.7 mm/rev (42 feeds)
Cross feed within	0.014 - 0.784 mm/rev (42 feed rates)
Pitch - metric in range	0.1 - 14 mm/rev (41 pitches)
Pitch - inch in range	112 - 2 turns/inch (41 pitches)
Diametral pitch in range	4 - 112 turns/π (50 thread)
Modular thread in range	0.1 - 7 mm x π (34 thread)
Tailstock	
Tailstock seat	MT4
Spindle sleeve diameter / stroke	Ø 60 mm / 130 mm
Dimensions and weight	
Length x width x height	2 765 x 1 065 x 1 550 mm
Net weight	2 020 kg

Dimensions

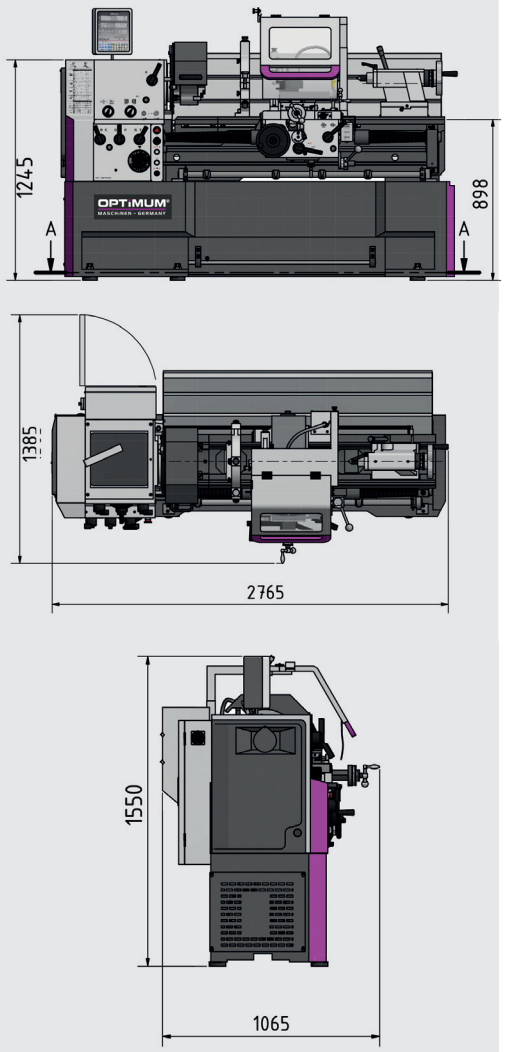

Lathe chuck	Article no.
OPTIMUM lathe chucks Ø 315 mm No. 8	
Three-jaw lathe chuck, centric	3442768
Four-jaw lathe chuck, centric	3442856
Four-jaw lathe chuck, single	3442888
BISON lathe chuck Ø 315 mm No. 8	
Three-jaw lathe chuck, centric	3450335
Four-jaw lathe chuck, centric	3450385
› Information on lathe chucks from page 218	

Accessories	Article no.
Clamping disc Ø 450 mm no. 8	3442982
Travelling centre MT5	3440705
BISON co-travelling centre MT5	3451005
Position stop with granular adjustment	3444022
› More accessories for lathes from page 214	

Our recommendation

cleancraft
flexCAT 378 EOT-PRO
Article no. 7003380



Remember to order a lathe chuck

Contents of package

- Steady rest passageway Ø 25 - Ø 178 mm
- Follow rest passageway Ø 19 - Ø 114 mm
- LED machine lamp
- Reduction sleeve MT7 / MT4
- Non-travelling centre MT4
- Fixed, but temperature resistant centre MT4
- Quick change tool holder 5-B
- Tool holder 25 x 120 type D for square chisels 20 mm
- Thread gauge
- Interchangeable gear set
- Machine initially filled with premium grade oil
- Operating tool

*For important details on operating machines with frequency converters, general instructions and explanations of packaging surcharges, data on TPFR, see page 323
The lathe (frequency converter) complies with the DIN EN 55011 standard: class C3

Precision feed and lead spindle lathes comply with strictest requirements in terms of technical equipment and precision.

Facts that impress in terms of quality, performance and price

- Machine bed and chassis made heavily ribbed cast material
- Single-part steel machine chassis
- High degrees of rigidity of the spindle bar housing thanks to strong ribbed 25GG cast material
- Precision slide
- shafts on needle bearings, all components lubricated in oil bath
- Hardened and polished bed guides
- All electronic controls centrally accessible
- All feed gearwheels made of steel, hardened and polished
- Hand wheels decoupled and approved in line with EN 23125
- Two-channel CW/CCW switch approved in line with EN 23125
- Switch with lifecycle calculation, approved in line with EN ISO 13849
- Coolant system featuring separate coolant tank, fill level display and oil trap; easy and complete draining and cleaning as per DIN
- Complete feed and lead spindle cover
- Working area completely illuminated
- Hardened and polished spindle guarantees high degrees of accuracy and durability
- The powerful machining performance means that a high level of chip removal during roughing work is no problem
- Lockable chip guard moves with the bed slide with integrated position indicator and coolant hose, manually adjustable
- No interchangeable gears required
- With safety device to prevent simultaneous operation of thread cutting and pitch mechanism
- Electronically braked motor
- Electronic feed shut-off of Z axis
- Electrical position shut-off with quadruple positioning stop
- Three-jaw lathe chuck included in standard scope of delivery
- Quick change tool holder SWH 7-C
- Tool holder 32 x 130 type D for square chisels 25 mm

- **Digital position display DP700**
  (More information see page 234)

TX 5216:
- Large spindle bore Ø 80 mm

TX 6222:
- Large spindle bore Ø 105 mm

Control cabinet



› 24 Volt DC power supply
› All contactors und relays by SIEMENS or Schneider

Back panel



› Easy to service thanks to removable rear panel

Energy chain



› for routing that is easy on the cable and hose material

Touch panel



Centralised control
› Pitch deactivation using button
› Feed bar drive
› Rapid motion X and Y axis
› Machine lamp
› Coolant



Fig. TX 5216

Technical specifications, accessories and dimensions

GEAR DPA

Model	TX 5216	TX6222
Article no.	3432440	3432460
Output		
Electrical connection	400 V / 3 Ph ~50 Hz	
Total rated value	6.1 kW	8.5 kW
Coolant pump motor	100 W	
Spindle		
Drive motor	5.5 kW	7.5 kW
Spindle taper	MT7	Ø 113 mm (Taper 1:20)
Spindle holder	Camlock DIN ISO 702-2 No. 8	
Spindle bore, bar passage diameter	Ø 80 mm	Ø 105 mm
Quick change tool holder	SWH 7-C	
Work area		
Centre height	260 mm	310 mm
Centre width	1 600 mm	2 200 mm
Swing diameter over machine bed*	520 mm	620 mm
Swing over cross slide	324 mm	424 mm
Bed width	350 mm	
Speed range		
Spindle speed	30 - 1 500 rpm	40 - 1 650 rpm
Number of speeds	12 speeds	
Travel		
Top slide travel	170 mm	
Cross slide travel	350 mm	
Feeds and pitches		
Longitudinal feed within the range	0.05 - 1.5 mm/rev (55 feeds)	
Cross feed within	0.025 - 0.75 mm/rev (55 feeds)	
Metric pitch	0.5 - 15 mm/rev (55 pitches)	
Pitch - inch in range	60 - 2 turns/inch (55 pitches)	
Diametral pitch in range	0.25 - 7.5 mm x π (55 thread)	
Modular thread in range	120 - 4 turns/π (55 pitch)	
Tailstock		
Tailstock seat	MT5	
Tailstock spindle sleeve diameter / stroke	Ø 72 mm/ 180 mm	
Dimensions and weight		
Length x width x height (mm)	3 016 x 1 270 x 2 217	3 550 x 1 200 x 1 830
Net weight	2 470 kg	2 800 kg

Dimensions

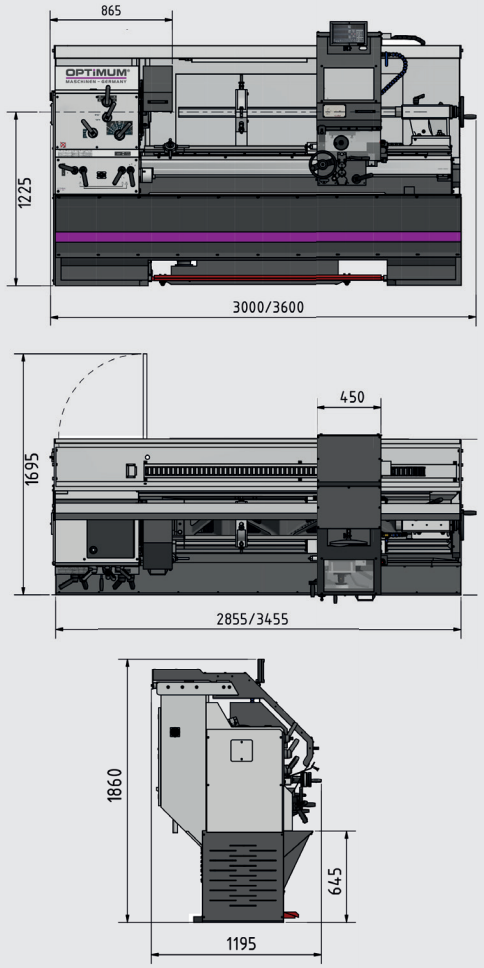

Follow this for the video presentation of our OPTIMUM lathe TX 5216


Fig.:
Fixed steady


Fig.:
Travelling steady

Accessories	Article no.
TX 5216	
Follow rest passageway Ø 15 - Ø 125 mm	3438020
Steady rest passageway Ø 10 - Ø 185 mm	3438023
Steady rest passageway Ø 160 - Ø 285 mm	3438024
Lathe tool set HM 20 mm (see page 225)	3441670
Lathe tool set HM 20 mm, extension kit (see page 225)	3441617
TX 6222	
Follow rest passageway Ø 15 - Ø 125 mm	3438030
Steady rest passageway Ø 10 - Ø 185 mm	3438033
Steady rest passageway Ø 160 - Ø 285 mm	3438034
Lathe tool set HM 25 mm, extension kit (see page 226)	3441672
Lathe tool set HM 25 mm (see page 226)	3441623
Accessories	Article no.
Clamping disc Ø 450 mm no. 8	3442982
BISON co-travelling centre MT5	3451005
Vibration damping machine base SE 85 (6 units required)	3352982
› More accessories for lathes from page 214	

Contents of package

- › Three-jaw lathe chuck Ø 315 mm no. 8
- › Non-travelling centre MT5 long
- › Fixed centre MT5 short
- › Quick change tool holder SWH 7-C
- › Tool holder for square chisels 32 x 130 type D for 25 mm square chisels
- › Machine initially filled with premium grade oil
- › Operating tool

TX 5216:

- › Reduction sleeve MT7 - MT5

TX 6222:

- › Reduction sleeve Ø 113 mm / MT5

*For important details on operating machines with frequency converters, general instructions and explanations of packaging surcharges, data on TPFR, see page 323

NEW

INDUSTRY

Precision feed and lead spindle lathe with electronically controlled drive and digital position display NEWALL DP 700

Facts that impress in terms of quality, performance and price

- Machine bed and chassis made heavily ribbed cast material
- Single-part steel machine chassis
- High degrees of rigidity of the spindle bar housing thanks to strong ribbed 25GG cast material
- Precision slide
- shafts on needle bearings, all components lubricated in oil bath
- Hardened and polished bed guides
- All electronic controls centrally accessible
- All feed gearwheels made of steel, hardened and polished
- Hand wheels decoupled and approved in line with EN 23125
- Two-channel CW/CCW switch approved in line with EN 23125
- Switch with lifecycle calculation, approved in line with EN ISO 13849
- Coolant system featuring separate coolant tank, fill level display and oil trap; easy and complete draining and cleaning as per DIN
- Complete feed and lead spindle cover
- Working area completely illuminated
- Easy to service thanks to removable rear panel
- Hardened and polished spindle guarantees high degrees of accuracy and durability
- The powerful machining performance means that a high level of chip removal during roughing work is no problem
- Energy chain for material-friendly cable and hose guiding
- Lockable chip guard moves with the bed slide with integrated position indicator and coolant hose, manually adjustable
- No interchangeable gears required
- With safety device to prevent simultaneous operation of thread cutting and pitch mechanism
- Electronically braked motor
- Electronic feed shut-off of Z axis
- Electrical position shut-off with quadruple positioning stop
- Three-jaw lathe chuck included in standard scope of delivery
- Quick change tool holder SWH 7-C
- Tool holder 32 x 130 type D for square chisels 25 mm

Dig. Position display DPA 700



› Intuitive and user-friendly user interface

(More information see page 234)

Siemens inverter



› **SINAMICS G120D**

› More information: „Siemens SINAMICS G 120D Frequency inverters“ on page 186

Control cabinet

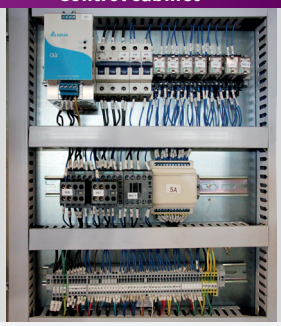

› 24 Volt DC power supply

› All contactors und relays by SIEMENS or Schneider

Touch panel



Centralised control

› Pitch deactivation using button

› Feed bar drive

› Rapid motion X and Y axis

› Machine lamp

› Coolant



GEAR DPA

Technical specifications, accessories and dimensions

Model	TX 5216V
Article no.	3432445
Output	
Electrical connection	400 V / 3 Ph ~50 Hz
Total rated value	5.5 kW
Coolant pump motor	100 W
Spindle	
Drive motor	5.5 kW
Spindle taper	MT7
Spindle holder	Camlock DIN ISO 702-2 No. 8
Spindle bore, bar passage diameter	Ø 80 mm
Quick change tool holder	SWH 7-C
Work area	
Centre height	260 mm
Centre width	1 600 mm
Swing diameter over machine bed*	520 mm
Swing over cross slide	324 mm
Bed width	350 mm
Speed range	
Spindle speed	45 - 1 800 rpm
Number of speeds	2 x 3 speeds
Travel	
Top slide travel	170 mm
Cross slide travel	350 mm
Feeds and pitches	
Longitudinal feed within the range	0.05 - 1.5 mm/rev (55 feeds)
Cross feed within	0.025 - 0.75 mm/rev (55 feeds)
Metric pitch	0.5 - 15 mm/rev (55 pitches)
Pitch - inch in range	60 - 2 turns/inch (55 pitches)
Diametral pitch in range	0.25 - 7.5 mm x π (55 thread)
Modular thread in range	120 - 4 turns/π (55 pitch)
Tailstock	
Tailstock seat	MT5
Tailstock spindle sleeve diameter / stroke	Ø 72 mm/ 180 mm
Dimensions and weight	
Length x width x height	3,016 x 1,195 x 1,860 mm
Net weight	2 470 kg

Dimensions

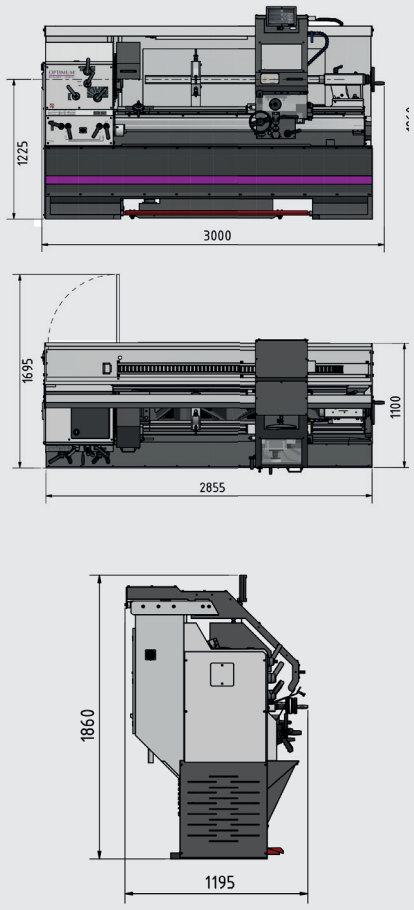

YouTube
Follow this for the video presentation of our OPTIMUM lathe TX 5216


Fig.:
Fixed steady


Fig.:
Travelling steady

Accessories	Article no.
TX 5216	
Follow rest passageway Ø 15 - Ø 125 mm	3438020
Steady rest passageway Ø 10 - Ø 185 mm	3438023
Steady rest passageway Ø 160 - Ø 285 mm	3438024
Lathe tool set HM 20 mm (see page 225)	3441670
Lathe tool set HM 20 mm, extension kit (see page 226)	3441617
Accessories	Article no.
Clamping disc Ø 450 mm no. 8	3442982
Travelling centre MT5	3440705
BISON co-travelling centre MT5	3451005
Vibration dampers machine base SE 85 (6 units required)	3352982
› More accessories for lathes from page 214	

Contents of package

- › Three-jaw lathe chuck Ø 315 mm no. 8
- › Machine lamp
- › Reduction sleeve MT7 / MT5
- › Non-travelling centre MT5 long
- › Fixed centre MT5 short
- › Quick change tool holder SWH 7-C
- › Tool holder for square chisels 32 x 130 type D for 25 mm square chisels
- › Machine initially filled with premium grade oil
- › Operating tool

*For important details on operating machines with frequency converters, general instructions and explanations of packaging surcharges, data on TPFR, see page 323

INDUSTRY

Heavy leading and feed spindle lathes, characterised by excellent flexibility, precision and economy. With DPA 21 digital position display and quick change tool holder

Facts that impress in terms of quality, performance and price

- Tempered and polished z-axis guideway
- Spindle collet Camlock DIN ISO 702-2 no. 8
- Precision slide
- Hand wheels with adjustable fine scaling 0.04 / 0.02 mm
- All guides adjustable using cleats
- Gears and shafts running in oil bath
- Adjustment range top slide ± 90°
- Guaranteed concentricity of spindle nose better than 0.015 mm
- Main spindle runs in oil bath
- Gearwheels smooth running, tempered, ground and borne on 2 re-adjustable precision taper rollers
- Gears and shafts tempered and ground, running in oil bath on precision bearings
- Clear-cut selector lever for switching the feed speeds
- Closed design of the quick shift feed gear
- Two-channel CW/CCW switch approved in line with EN 23125
- Switch with lifecycle calculation, approved in line with EN ISO 13849
- Clockwise/anti-clockwise rotation switchable on bed slide, switchable via switching spindle
- Central lubrication in bed slide
- Leading spindle cover
- Emergency stop push button, motor circuit breaker, lockable main switch
- Emergency stop device with foot pedal
- Safety hand wheels with release function acc. to EN23125 in the X and Z axis
- Tailstock adjustable ± 10 mm for turning spheres
- Tailstock spindle sleeve and handwheel with adjustable fine scaling 0.025 mm. Fast, easy adjustment without tools thanks to clamping lever
- Grey cast iron prism bed with strong ribbing, induction tempered and precision ground
- Coolant system featuring separate coolant tank, fill level display and oil trap; easy and complete draining and cleaning as per DIN
- LED machine lamp in chip guard
- Energy chain for material-friendly cable and hose guiding
- Scale on thread gauge adjustable

Control cabinet



› 24 Volt DC power supply
› All contactors und relays by SIEMENS or Schneider

Quick change tool holder



› SWH 7-C
› 1 tool holder 32 x 150 type D
› Play-free and repetition-accurate clamping of the change holder

Dig. Position display DPA 21



› User-friendly membrane keyboard, splash water protected, sealed and dazzle free

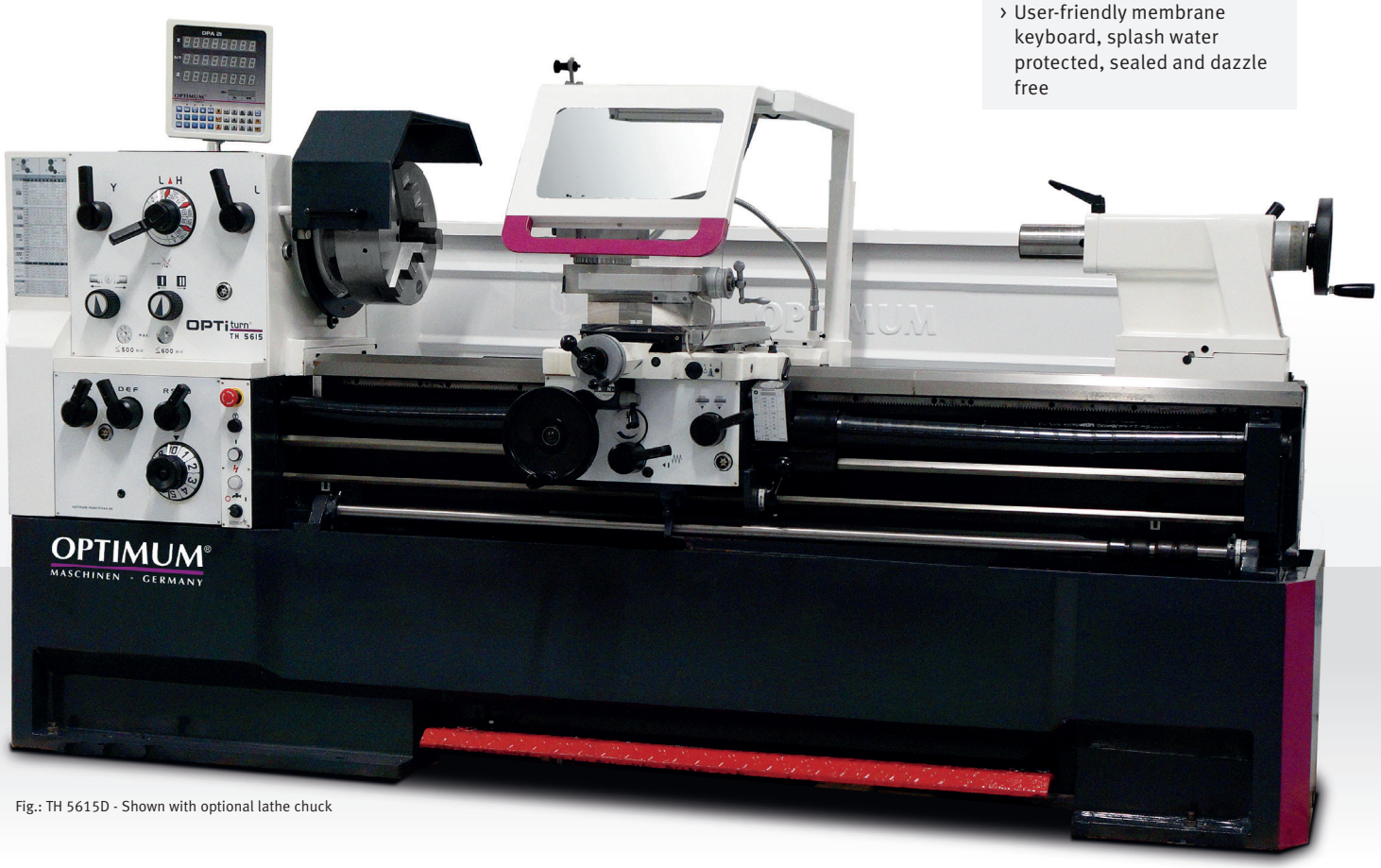

Fig.: TH 5615D - Shown with optional lathe chuck

Technical specifications, accessories and dimensions

GEAR DPA

Model	TH 5615D	TH 5620D	TH 5630D
Article no.	3462160	3462170	3462180
Output			
Electrical connection	400 V / 3 Ph ~50 Hz		
Total rated value	8.5 kW		
Coolant pump motor	125 Watts		
Spindle			
Drive motor	7.5 kW		
Spindle taper	MT7		
Spindle holder	Camlock DIN ISO 702-2 No. 8		
Spindle bore, bar passage diameter	Ø 80 mm		
Quick change tool holder height	SWH 7-C		
Work area			
Centre height	280 mm		
Centre width	1 420 mm	1 910 mm	2 910 mm
Swing diameter over machine bed*	560 mm		
Swing over cross slide	355 mm		
Bed width	350 mm		
Swing without bed bridge	790 mm		
Turning length in bed bridge	170 mm		
Speed range			
Spindle speed	25 - 1 600 rpm		
Number of speeds	12 speeds		
Travel			
Top slide travel	130 mm		
Cross slide travel	316 mm		
Feeds and pitches			
Longitudinal feed within the range	0.059 - 1.646 mm/U (35)		
Cross feed within	0.020 - 0.573 mm/U (35)		
Pitch - metric in range	0.2 - 14 mm/U (47)		
Pitch - inch in range	112 - 2 turns/inch (60 pitches)		
Diametral pitch in range	4 - 112 turns/π (50 pitch)		
Modular thread in range	0.1 - 7 mm x π (34 thread)		
Tailstock			
Tailstock seat	MT5		
Spindle sleeve diameter / stroke	Ø 75 mm/180 mm		
Dimensions and weight			
Length	2 950 mm	3 450 mm	4 450 mm
width x height	1 150 x 1 650 mm		
Net weight	2 300 kg	2 720 kg	3 000 kg

Dimensions

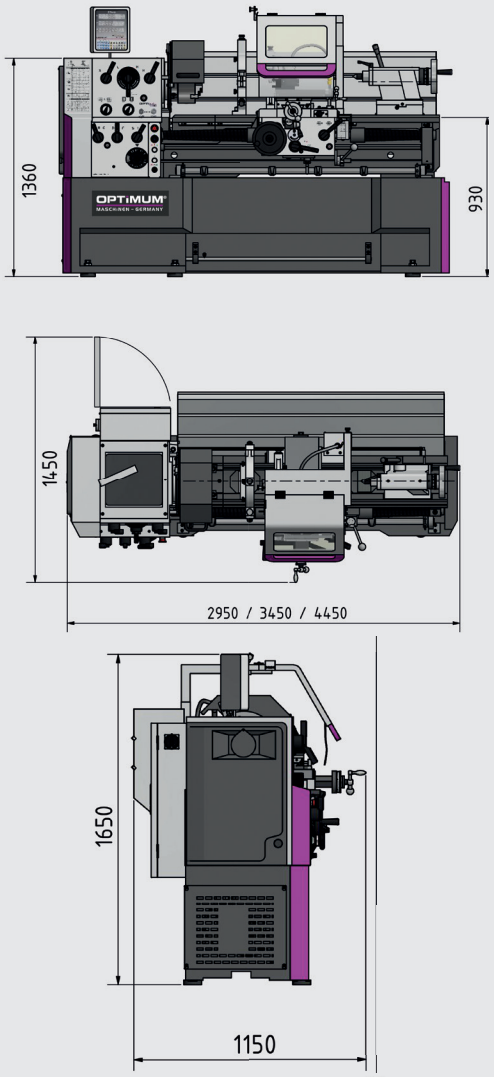

Our recommendation

cleancraft
flexCAT 378 EOT-PRO
Article no. 7003380



Remember to order a lathe chuck

Lathe chuck	Article no.
OPTIMUM three-jaw lathe chuck Ø 315 mm no. 8, centric	3442768
OPTIMUM Four-jaw lathe chuck Ø 315 mm no. 8, centric	3442856
OPTIMUM Four-jaw lathe chuck Ø 315 mm no. 8, individual	3442888
BISON three-jaw lathe chuck Ø 315 mm no. 8, centric	3450335
BISON Four-jaw lathe chuck Ø 315 mm no. 8, centric	3450385
Accessories	Article no.
Clamping disc Ø 450 mm no. 8	3442982
Travelling centre MT5	3440705
BISON co-travelling centre MT5	3451005
Spare tool holder 40 x 160 type H for round	3384326
Spare tool holder 32 x 150 Type D square	3384308
Lathe tool set HM 32 mm, 5-part (see page 227)	3441674
Vibration dampers machine base SE 85 (6 units required TH5615/5620) (8 units required TH5630)	3352982
Position stop with granular adjustment	3444022

Contents of package

- Steady rest passageway Ø 19 - Ø 165 mm
- Follow rest passageway Ø 16 - Ø 95 mm
- LED machine lamp
- Reduction sleeve MT7 / MT5
- Non-travelling centre MT5
- Fixed, but temperature resistant centre MT5
- Quick change tool holder 7-C
- Tool holder 32 x 150 type D for square chisels 25 mm
- Thread gauge
- Gear wheels for threading gauge (metric)
- Interchangeable gear set
- Machine initially filled with premium grade oil
- Operating tool

*For important details on operating machines with frequency converters, general instructions and explanations of packaging surcharges, data on TPFR, see page 323

INDUSTRY

Heavy leading and feed spindle lathes, characterised by excellent flexibility, precision and economy. Featuring Siemens inverter Vario drive

Facts that impress in terms of quality, performance and price

- Tempered and polished z-axis guideway
- All guides adjustable using cleats
- Spindle collet Camlock DIN ISO 702-2 no. 8
- Precision slide
- Hand wheels with adjustable fine scaling 0.04 / 0.02 mm
- Adjustment range top slide ± 90°
- Guaranteed concentricity of spindle nose better than 0.015 mm
- Gearwheels smooth running, tempered, ground and borne on 2 re-adjustable precision taper rollers
- Clear-cut selector lever for switching the feed speeds
- Closed design of the quick shift feed gear
- Gears and shafts tempered and ground, running in oil bath on precision bearings
- Two-channel CW/CCW switch approved in line with EN 23125
- Switch with lifecycle calculation, approved in line with EN ISO 13849
- Clockwise/anti-clockwise rotation switchable on bed slide, switchable via switching spindle
- Central lubrication in bed slide
- Leading spindle cover
- Emergency stop push button, motor circuit breaker, lockable main switch
- Emergency stop device with foot pedal
- Safety hand wheels with release function acc. to EN23125 in the X and Z axis
- Tailstock adjustable ± 10 mm for turning spheres
- Tailstock spindle sleeve and handwheel with adjustable fine scaling 0.025 mm. Fast, easy adjustment without tools thanks to clamping lever
- Grey cast iron prism bed with strong ribbing, induction tempered and precision ground
- Coolant system featuring separate coolant tank, fill level display and oil trap; easy and complete draining and cleaning as per DIN
- LED machine lamp in chip guard
- Two speeds
- Spindle bore/bar passage Ø 105 mm
- Siemens Sinamics frequency inverter / Safety Integrated
- Energy chain for material-friendly cable and hose guiding
- Scale on thread gauge adjustable
- Quick change tool holder SWH 7-C
- 1 tool holder 32 x 150 type D for square chisels 25 mm

Control cabinet



› 24 Volt DC power supply
› All contactors und relays by SIEMENS or Schneider

Siemens inverter

Made in EU



› **SINAMICS G120D**
› More information: „Siemens SINAMICS G 120D Frequency inverters“ on page 186

Dig. Position display DPA 21



› User-friendly membrane keyboard, splash water protected, sealed and dazzle free

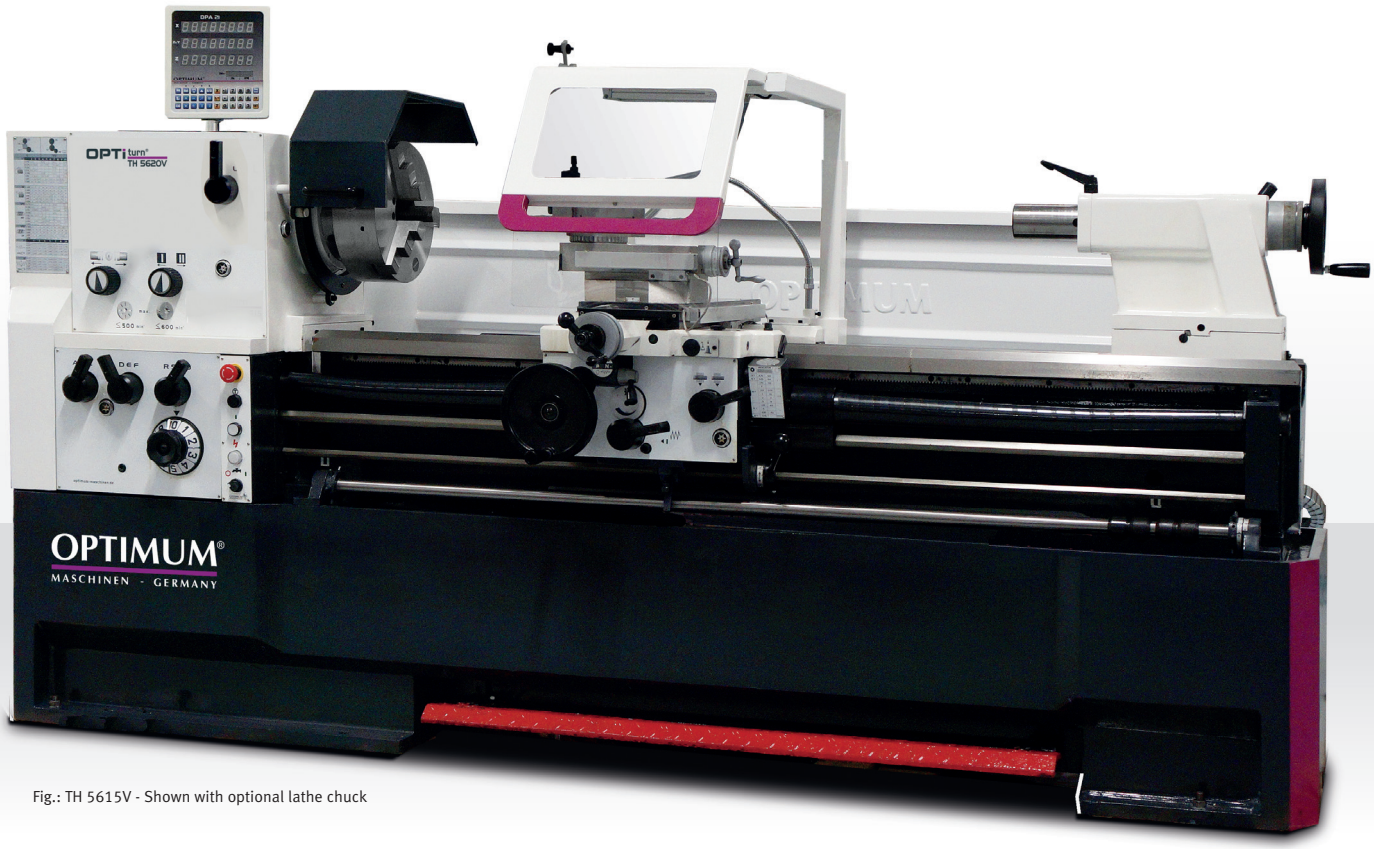

Fig.: TH 5615V - Shown with optional lathe chuck

GEAR DPA VARIO

Technical specifications, accessories and dimensions

Model	TH 5620V
Article no.	3462175
Output	
Electrical connection	400 V / 3 Ph ~50 Hz
Total rated value	8.5 kW
Coolant pump motor	125 Watts
Spindle	
Drive motor	7.5 kW
Spindle taper	Ø 113 mm (taper 1:20)
Spindle holder	Camlock DIN ISO 702-2 No. 8
Spindle bore, bar passage diameter	Ø 105 mm
Quick change tool holder	SWH 7-C
Work area	
Centre height	280 mm
Centre width	1 910 mm
Swing diameter over machine bed*	560 mm
Swing over cross slide	355 mm
Bed width	350 mm
Swing without bed bridge	790 mm
Turning length in bed bridge	170 mm
Speed range	
Spindle speed	25 - 1 600 rpm
Number of speeds	2 speeds; electronically controlled
Travel	
Top slide travel	130 mm
Cross slide travel	316 mm
Feeds and pitches	
Longitudinal feed within the range	0.031 - 1.7 mm/U (42)
Cross feed within	0.014 - 0.784 mm/U (42)
Pitch - metric in range	0.1 - 14 mm/U (47)
Pitch - inch in range	112 - 2 turns/inch (60 pitches)
Diametral pitch in range	4 - 112 turns/π (50 pitch)
Modular thread in range	0.1 - 7 mm x π (34 thread)
Tailstock	
Tailstock seat	MT5
Spindle sleeve diameter / stroke	Ø 75 mm/180 mm
Dimensions and weight	
Length x width x height	3,450 x 1,150 x 1,650 mm
Net weight	2 720 kg

Dimensions

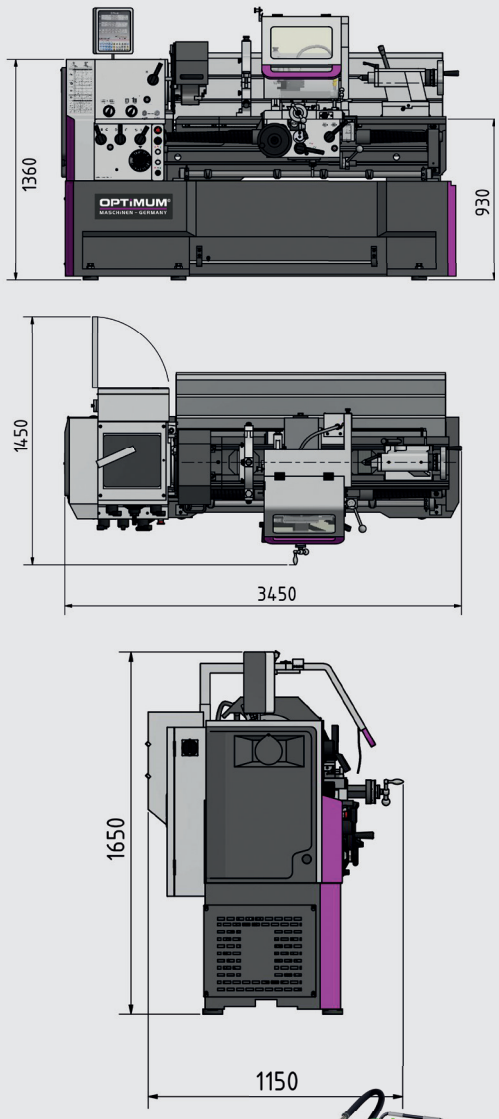

Lathe chuck	Article no.
OPTIMUM lathe chucks	
Three-jaw lathe chuck Ø 315 mm no. 8, centric	3442768
Four-jaw lathe chuck Ø 315 mm no. 8, centric	3442856
Four-jaw lathe chuck Ø 315 mm no. 8, individual	3442888
BISON lathe chucks	
Three-jaw lathe chuck Ø 315 mm no. 8, centric	3450335
Four-jaw lathe chuck Ø 315 mm no. 8, centric	3450385
› Information on lathe chucks from page 218	

Accessories	Article no.
Clamping disc Ø 450 mm no. 8	3442982
Travelling centre MT5	3440705
BISON co-travelling centre MT5	3451005
Spare tool holder 40 x 160 type H for round	3384326
Spare tool holder 32 x 150 Type D square	3384308
Lathe tool set HM 32 mm, 5-part (see page 227)	3441674
Position stop with granular adjustment	3444023

Our recommendation

cleancraft
flexCAT 378 EOT-PRO
Article no. 7003380



Remember to order a lathe chuck

Contents of package

- › Steady rest passageway Ø 19 - Ø 165 mm
- › Follow rest passageway Ø 16 - Ø 95 mm
- › LED machine lamp
- › Reduction sleeve Ø 113 mm / MT5
- › Non-travelling centre MT5
- › Fixed, but temperature resistant centre MT5
- › Quick change tool holder 7-C
- › Tool holder 32 x 150 type D for square chisels 25 mm
- › Thread gauge
- › Gear wheels for threading gauge (metric)
- › Interchangeable gear set
- › Machine initially filled with premium grade oil
- › Operating tool

*For important details on operating machines with frequency converters, general instructions and explanations of packaging surcharges, data on TPFR, see page 323
The lathe (frequency converter) complies with the DIN EN 55011 standard: class C3

Leading and feed spindle lathes, characterised by excellent flexibility, precision and economy.

With DPA 21 digital position display and quick change tool holder.

Facts that impress in terms of quality, performance and price

- Tempered and polished z-axis guideway
- Spindle collet Camlock DIN ISO 702-2 no. 8
- All guides adjustable using cleats
- Precision slide
- Adjustment range top slide ± 90°
- Guaranteed concentricity of spindle nose better than 0.015 mm
- Gearwheels smooth running, tempered, ground and borne on 2 re-adjustable precision taper rollers
- Clear-cut selector lever for switching the feed speeds
- Closed design of the quick shift feed gear
- Gears and shafts tempered and ground, running in oil bath on precision bearings
- Hand wheels decoupled and approved in line with EN 23125
- Safety hand wheels with release function in the X axis
- Hand wheels with adjustable fine scaling 0.04 / 0.02 mm
- Safety limit switch with positively opening contacts
- Two-channel CW/CCW switch approved in line with EN 23125
- Switch with lifecycle calculation, approved in line with EN ISO 13849
- Clockwise/anti-clockwise rotation switchable on bed slide, switchable via switching spindle
- Central lubrication in bed slide
- Coolant system featuring separate coolant tank, fill level display and oil trap; easy and complete draining and cleaning as per DIN
- Leading spindle cover
- Emergency stop push button, motor circuit breaker, lockable main switch
- Tailstock adjustable ± 10 mm for turning spheres
- Tailstock spindle sleeve and hand wheel with adjustable fine scaling
- Tailstock crank for position change
- Tailstock spindle sleeve with two adjustable transmission ratios 1/4 or 1/1 rev
- LED machine lamp
- Emergency stop device with foot pedal
- Electrical motor brake with fast emergency stop – in normal operations, fast stop without post-run
- Energy chain for material-friendly cable and hose guiding
- Quick change tool holder SWH 9-D
- Tool holder 41 x 180 type D for square chisels 32 mm

Control cabinet



› 24 Volt DC power supply
› All contactors und relays by SIEMENS or Schneider

Flat and longitudinal feed



› Fast feed - pushbutton and selector lever for activating and deactivating rapid motion in transverse and longitudinal directions for an even more rational work approach. Does not switch off the entire machine when running into the limit switch

Dig. Position display DPA 21



› User-friendly membrane keyboard, splash water protected, sealed and dazzle free

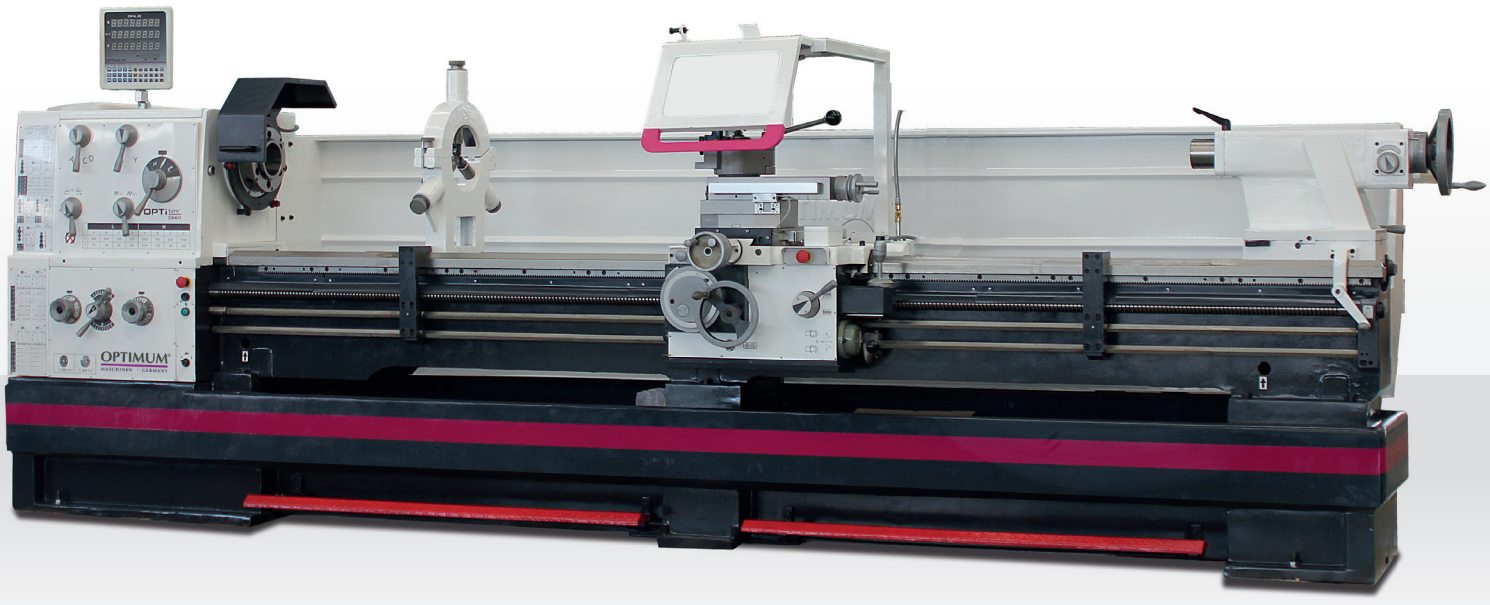

Fig.: TH 6630D

GEAR DPA

Technical specifications, accessories and dimensions

Model	TH 6620D	TH 6630D
Article no.	3462210	3462220
Output		
Electrical connection	400 V / 3 Ph ~50 Hz	
Total rated value	10 kW	
Coolant pump motor	150 W	
Spindle		
Drive motor	9 kW	
Spindle taper	Ø 113 mm (taper 1:20)	
Spindle holder	Camlock DIN ISO 702-2 No. 8	
Spindle bore, bar passage diameter	Ø 105 mm	
Quick change tool holder	SWH 9-D	
Work area		
Centre height	330 mm	
Centre width	2 050 mm	3 050 mm
Swing diameter over machine bed*	660 mm	
Swing over cross slide	440 mm	
Bed width	400 mm	
Swing without bed bridge	900 mm	
Turning length in bed bridge	250 mm	
Load bearing capacity	1.4 t/m	
Speed range		
Spindle speed	25 - 1 600 rpm	
Number of speeds	16 speeds	
Travel		
Top slide travel	230 mm	
Cross slide travel	368 mm	
Feeds and pitches		
Feed motor output	550 W	
Rapid traverse	3.8 m /min. max. 5 min. (30 min. break)	
Longitudinal feed within the range	0.044 - 1.48 mm/rev (25 feeds)	
Cross feed within	0.022 - 0.74 mm/rev (25 feeds)	
Pitch - metric in range	0.45 - 120 mm/rev (54 pitches)	
Pitch - inch in range	80 - 7/16 turns/inch (60 pitches)	
Diametral pitch in range	7/8 - 160 turns/π (42 pitch)	
Modular thread in range	0.25 - 60 mm x π (46 thread)	
Tailstock		
Tailstock seat	MT5	
Tailstock- sleeve diameter/ sleeve travel	90 mm / 235 mm	
Dimensions and weight		
Length	3 650 mm	4 650 mm
width x height	1 500 x 1 785 mm	
Net weight	3,345 kg	3 730 kg

Dimensions

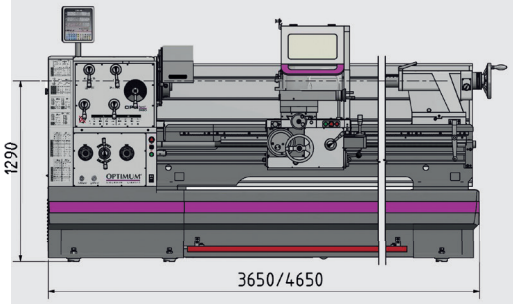

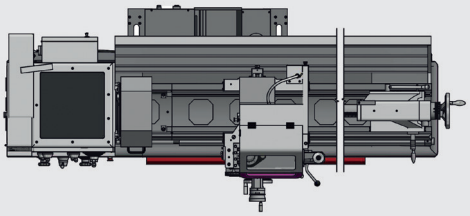

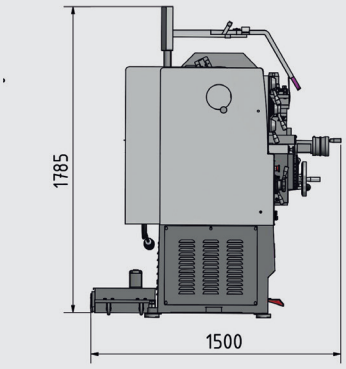

Our recommendation

cleancraft
flexCAT 378 EOT-PRO
Article no. 7003380



Remember to order a lathe chuck

Lathe chuck Ø 315 mm No. 8	Article no.
OPTIMUM three-jaw lathe chuck, centric	3442768
OPTIMUM Four-jaw lathe chuck, centric	3442856
OPTIMUM Four-jaw lathe chuck, single	3442888
BISON Three-jaw lathe chuck, centric	3450335
BISON Four-jaw lathe chuck, centric	3450385

Accessories	Article no.
Travelling centre MT5	3440705
BISON co-travelling centre MT5 (2-row SKF angular contact bearings)	3451005
Lathe tool set HM 25 mm (see page 226)	3441672
Lathe tool set HM 25 mm, extension kit (see page 226)	3441623
Vibration dampers machine base SE 85 (6 units (TH 6620) or 8 units (TH 6630) are required)	3352982

› More accessories for lathes from page 214

Contents of package

- › Steady rest passageway Ø 20 - Ø 190 mm
- › Follow rest passage Ø 20 - Ø 130 mm
- › LED machine lamp
- › Reduction sleeve Ø 113 mm / MT5
- › Non-travelling centre MT5
- › Fixed, but temperature resistant centre MT5
- › Travelling centre MT5
- › Quick change tool holder 9-D
- › Tool holder 41 x 180 type D for square chisels 32 mm
- › Interchangeable gear set
- › Quality oil included
- › Operating tool

*For important details on operating machines with frequency converters, general instructions and explanations of packaging surcharges, data on TPFR, see page 323

Leading and feed spindle lathes, characterised by excellent flexibility, precision and economy. With DPA 21 digital position display and quick change tool holder.

Facts that impress in terms of quality, performance and price

- Tempered and polished z-axis guideway
- Spindle collet Camlock DIN ISO 702-2 no. 8
- All guides adjustable using cleats
- Precision slide
- Adjustment range top slide ± 90°
- Guaranteed concentricity of spindle nose better than 0.015 mm
- Gearwheels smooth running, tempered, ground and borne on 2 re-adjustable precision taper rollers
- Clear-cut selector lever for switching the feed speeds
- Closed design of the quick shift feed gear
- Gears and shafts tempered and ground, running in oil bath on precision bearings
- Hand wheels decoupled and approved in line with EN 23125
- Safety hand wheels with release function in the X axis
- Hand wheels with adjustable fine scaling 0.04 / 0.02 mm
- Safety limit switch with positively opening contacts
- Two-channel CW/CCW switch approved in line with EN 23125
- Switch with lifecycle calculation, approved in line with EN ISO 13849
- Clockwise/anti-clockwise rotation switchable on bed slide, switchable via switching spindle
- Central lubrication in bed slide
- Coolant system featuring separate coolant tank, fill level display and oil trap; easy and complete draining and cleaning as per DIN
- Leading spindle cover
- Emergency stop push button, motor circuit breaker, lockable main switch
- Tailstock adjustable ± 10 mm for turning spheres
- Tailstock spindle sleeve and hand wheel with adjustable fine scaling
- Tailstock crank for position change
- Tailstock spindle sleeve with two adjustable transmission ratios 1/4 or 1/1 rev
- LED machine lamp
- Emergency stop device with foot pedal
- Electrical motor brake with fast emergency stop – in normal operations, fast stop without post-run
- Electrical system with Siemens and Schneider components
- Energy chain for material-friendly cable and hose guiding
- Quick change tool holder SWH 9-D
- Tool holder 41 x 180 type D for square chisels 32 mm

Control cabinet



› 24 Volt DC power supply
› All contactors und relays by SIEMENS or Schneider

Flat and longitudinal feed



› Fast feed - pushbutton and selector lever for activating and deactivating rapid motion in transverse and longitudinal directions for an even more rational work approach. Does not switch off the entire machine when running into the limit switch

Dig. Position display DPA 21



› User-friendly membrane keyboard, splash water protected, sealed and dazzle free

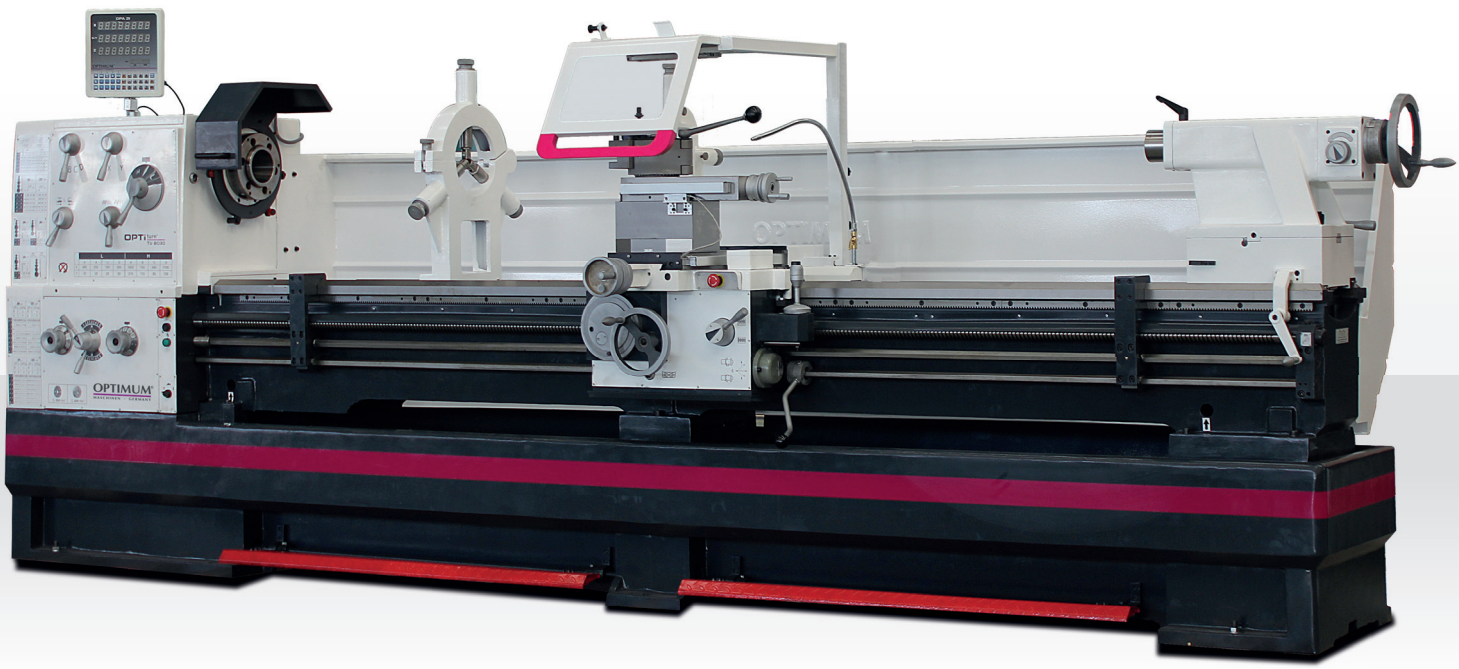

Fig.: TH 8030D

Technical specifications, accessories and dimensions

GEAR DPA

Model	TH 8020D	TH 8030D
Article no.	3462230	3462240
Output		
Electrical connection	400 V / 3 Ph ~50 Hz	
Total rated value	12 kW	
Coolant pump motor	150 W	
Spindle		
Drive motor	11 kW	
Spindle taper	Ø 113 mm (taper 1:20)	
Spindle holder	Camlock DIN ISO 702-2 No. 8	
Spindle bore, bar passage diameter	Ø 105 mm	
Quick change tool holder	SWH 9-D	
Work area		
Centre height	400 mm	
Centre width	2 050 mm	3 050 mm
Swing diameter over machine bed*	800 mm	
Swing over cross slide	570 mm	
Bed width	400 mm	
Swing without bed bridge	1 035 mm	
Turning length in bed bridge	250 mm	
Load bearing capacity	1.4 t/m	
Speed range		
Spindle speed	25 - 1 600 rpm	
Number of speeds	16 speeds	
Travel		
Top slide travel	230 mm	
Cross slide travel	368 mm	
Feeds and pitches		
Feed motor output	550 W	
Rapid traverse	3.8 m /min. max. 5 min. (30 min. break)	
Longitudinal feed within the range	0.044 - 1.48 mm/rev (25 feeds)	
Cross feed within	0.022 - 0.74 mm/rev (25 feeds)	
Pitch - metric in range	0.45 - 120 mm/rev (54 pitches)	
Pitch - inch in range	80 - 7/16 turns/inch (60 pitches)	
Diametral pitch in range	7/8 - 160 turns/π (42 pitch)	
Modular thread in range	0.25 - 60 mm x π (46 thread)	
Tailstock		
Tailstock seat	MT5	
Tailstock- sleeve diameter/ sleeve travel	90 mm / 235 mm	
Dimensions and weight		
Length	4 287 mm	5 287 mm
width x height	1 525 x 1 925 mm	
Net weight	3 455 kg	3 820 kg

Dimensions

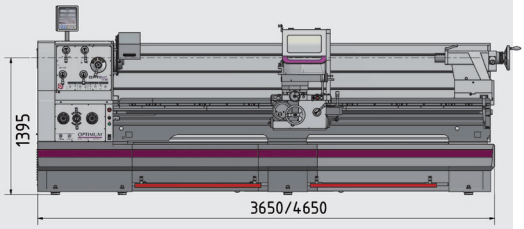

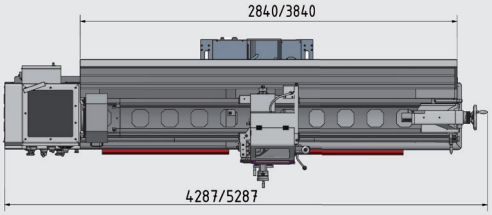

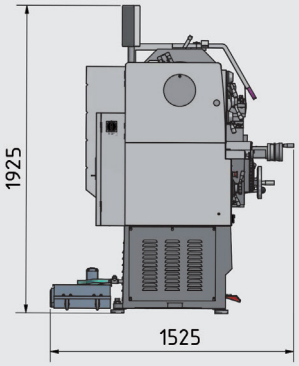

Our recommendation

cleancraft
flexCAT 378 EOT-PRO
Article no. 7003380



Remember to order a lathe chuck

Lathe chuck Ø 315 mm No. 8	Article no.
OPTIMUM three-jaw lathe chuck, centric	3442768
OPTIMUM Four-jaw lathe chuck, centric	3442856
OPTIMUM Four-jaw lathe chuck, single	3442888
BISON Three-jaw lathe chuck, centric	3450335
BISON Four-jaw lathe chuck, centric	3450385

Accessories	Article no.
Travelling centre MT5	3440705
BISON co-travelling centre MT5 (2-row SKF angular contact bearings)	3451005
Lathe tool set HM 25 mm (see page 226)	3441672
Lathe tool set HM 25 mm, extension kit (see page 226)	3441623
Vibration dampers machine base SE 85 (8 units are required)	3352982
› More accessories for lathes from page 214	

Contents of package

- › Steady rest passageway Ø 20 - Ø 185 mm
- › Follow rest passage Ø 20 - Ø 125 mm
- › LED machine lamp
- › Reduction sleeve Ø 113 mm / MT5
- › Non-travelling centre MT5
- › Fixed, but temperature resistant centre MT5
- › Travelling centre MT5
- › Quick change tool holder 9-D
- › Tool holder 41 x 180 type D for square chisels 32 mm
- › Interchangeable gear set
- › Quality oil included
- › Operating tool

*For important details on operating machines with frequency converters, general instructions and explanations of packaging surcharges, data on TPFR, see page 323

OPTIMUM®
MASCHINEN - GERMANY

ACCESSORIES FOR LATHES





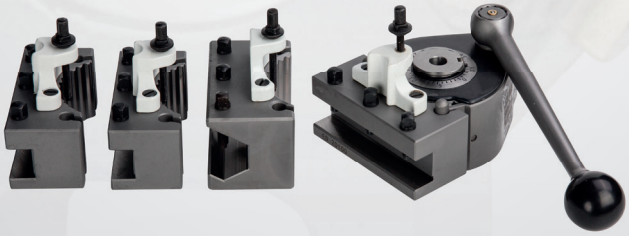





Travelling centre	Article no.
max. radial run-out 0.006 mm	
MT 1	3440701
› Max. speed 5 000 rpm; radial load max. 320 N	
MT 2	3440702
› Max. speed 5 000 rpm; radial load max. 400 N	
MT 3	3440703
› Max. speed 4 500 rpm; radial load max. 800 N	
MT 4	3440704
› Max. speed 3 500 rpm; radial load max. 1 250 N	
MT 5	3440705
› Max. speed 3 000 rpm; radial load max. 1 500 N	
MT 6	3440706
› Max. speed 2 500 rpm; radial load max. 1 800 N	

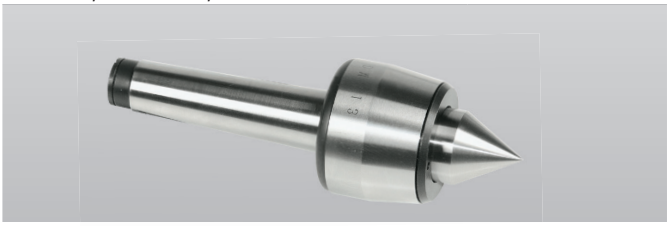

Collet kit SPZ - 5C	3441509
› 17-part, clamping range 3 - 25 mm	
› Norm 385 E	
› For universal collet chuck device	



Spring collet set	Article no.
› DIN 6499	
ER 16	3440282
› 12-part, clamping range Ø 1 - 10 mm	
ER 25	3441109
› 15-part, clamping range Ø 1 - 16 mm	
ER 32	3441122
› 18-part, clamping range Ø 3 - 20 mm	



Universal collet chuck device 5C	Article no.
› for lathe **TH 3309**	3441506
› for lathe **TH 42** (not Vario)	3441507

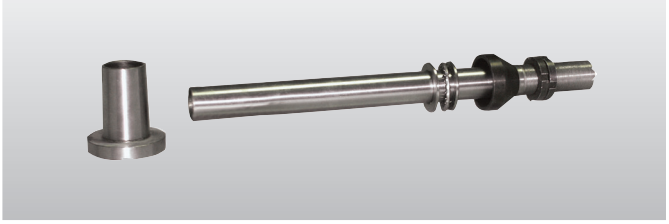

Travelling centre	Article no.
max. radial run-out 0.005 mm	
MT 2 (NSK ball roller bearings INA needle bearings)	3451002
› Max. speed 7 000 rpm; radial load max. 2 000 N	
MT 3 (NSK ball roller bearings INA needle bearings)	3451003
› Max. speed 5 000 rpm; radial load max. 4 000 N	
MT 4 (NSK ball roller bearings INA needle bearings)	3451004
› Max. speed 3 800 rpm; radial load max. 8 000 N	
MT 5 (2-row SKF angular contact bearings)	3451005
› Max. speed 3 000 rpm; radial load max. 20 000 N	

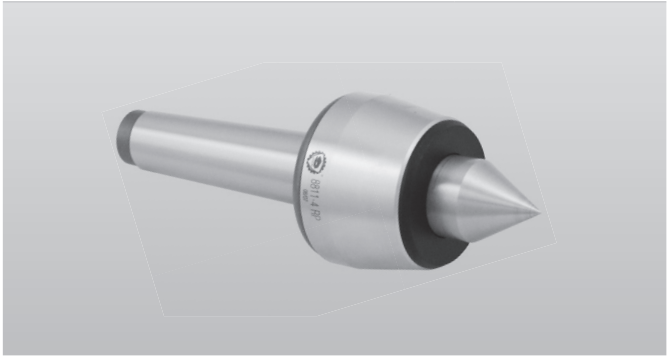

Travelling centre	Article no.
› With 7 replaceable tips	
› Body made of tempered and polished tool steel	
› Precision needle bearings guarantee excellent concentricity	
MT 2	3440732
MT 3	3440733
MT 4	3440734



Position stop	Article no.
With fine adjustment	
› for lathe **TH 3309**	3441522
› for lathe **TH 3610**	3441523
› for lathe **TH 46**	3444022
› for lathe **TH 56**	3444023

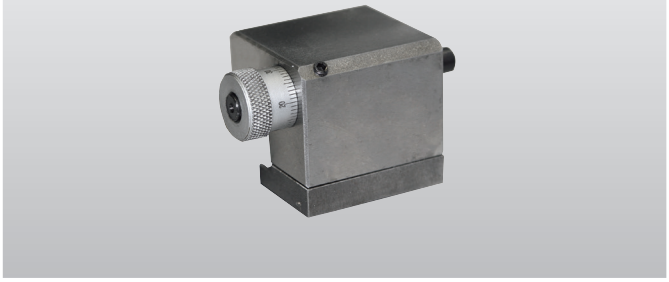

Compatibility overview accessories for lathes

Turning accessories		Article no.	TU 1503V	TU 2004V	TU 2304/V	TU 2406/V	TU 2506/V	TU 2807/V	TU 3008/G/V	TM 3110	TH 3309/D/V	TM 3310/D	TH 3610/D	TH 4010 V	TM 4010/D	TH 42	TH 4210V	TH 46	TH 4615V	TZ 4/ TZ4V	TX 4412	TX 5216	TX 6222	TH 56	TH 5620V	TH 66	TH 80
SWH	SWH AA	3384311		●																							
	SWH 1 - A	3384301			●	●	●	●	●																		
	SWH 3 - E	3384303								●	●	●	●	L	L												
	SWH 5 - B	3384305														●	L	L	L	L	L						
	SWH 7 - C	3384307																				L	L	L	L		
	SWH 9 - D	3384309																								L	L
Lathe tool	HM 8 mm	3441662	●	●	●																						
	HM 10 mm	3441664			●	●	●	●	●																		
	HM 12 mm	3441666			●	●	●	●	●																		
	HM 12 mm	3441212			●	●	●	●	●																		
	HM 16 mm	3441668								●	●	●	●	●	●												
	HM 16 mm	3441216								●	●	●	●	●	●												
	HM 16 mm	3441610								●	●	●	●	●	●												
	HM 20 mm	3441670														●	●	●	●	●	●	●		●	●		
	HM 20 mm	3441617														●	●	●	●	●	●	●		●	●		
	HM 25 mm	3441672															●	●	●	●	●	●	●			●	●
	HM 25 mm	3441623															●	●	●	●	●	●	●			●	●
	HM 32 mm	3441674																								●	●
Single lathe tool 12 mm	SSSC L1212J09	3441225			●	●	●	●	●																		
	SCLC L1212J09	3441226			●	●	●	●	●																		
Lathe tool	HM 8 mm	3441601	●	●	●																						
	HM 10 mm	3441602			●	●	●	●	●																		
	HM 12 mm	3441603			●	●	●	●	●																		
	HM 16 mm	3441604								●	●	●	●	●	●												
Inside lathe tool set	10 mm	3441640			●	●	●	●	●																		
	12 mm	3441641			●	●	●	●	●		●	●	●		●												
	Set	3441650									●	●	●	●	●	●	●	●	●	●	●	●	●	●	●	●	●
Pilot bit set		3203010			●	●	●	●	●		●	●	●		●	●	●	●	●	●	●	●	●	●	●	●	●
Anti-vibration element	SE 1	3381012			●*	●*	●*	●*	●*	●*	●	●	●		●					●							
	SE 2	3381016												●							●	●	●				
	SE 3	3381018														●	●	●	●					●	●	●	●
Levelling platen	SE 55	3352981			○*	○*	○*	○*	○*	○*	●	●	●		●						●						
	SE 85	3352982												●		●	●	●	●		●	●	●	●	●	●	●
Machine mobile base	MST1	3440409			●	●	●	●	●	●																	
Number of SE required (*if using the MST)					6*	6*	6*	6*	6*	6*	8	6	6	6	6	6	6	6	6	8	6	6	6	6	6	6/8	8
Clamping block	Set 16-05	3440653							●		●	●	●	●	●												
	Set 20-05	3440654													●	●	●	●	●	●	●	●	●	●	●		
	Set 25-05	3440655																								●	●
Twist drill HSS	MT 2	3051002		●	●	●	●	●																			
	MT 3	3051003							●	●	●	●	●	●	●	○	○	○	○	○	○	○	○	○	○	○	○
Clamping disc	Ø 170 mm	3440295		●																							
	Ø 220 mm	3440552				●																					
	Ø 240 mm	3441352					●																				
	Ø 265 mm	3441452						●																			
	Ø 300 mm Camlock No. 4	3442976							●		●																
	Ø 320 mm Camlock No. 5	3442979													●					●							
	Ø 330 mm Camlock No. 5	3442978											●														
	Ø 350 mm Camlock No. 6	3442980														●	●	●									
	Ø 450 mm Camlock No. 8	3442982																	●			●	●	●	●	●	●
Chuck flange	Ø 100 mm cylindrical	3440312		●																							
	Ø 125 mm cylindrical	3440313			●																						
	Ø 125 mm cylindrical	3440511				●																					
	Ø 125 mm short taper	3441312					●	●																			
	Ø 160 mm short taper	3441413						●																			

L - Included in scope of delivery | ● Recommended | ○ Recommended - restrictions apply

Turning accessories		Article no.	TU 1503V	TU 2004V	TU 2304/V	TU 2406/V	TU 2506/V	TU 2807/V	TU 3008/G/V	TM 3110	TH 3309/D/V	TM 3310/D	TH 3610/D	TH 4010 V	TM 4010/D	TH 42	TH 4210V	TH 46	TH 4615V	TZ 4/ TZ4V	TX 4412	TX 5216	TX 6222	TH 56	TH 5620V	TH 66	TH 80
BISON check flange	Ø 160 mm	3450245									●									●							
Collet chuck	ER16	3440281	●																								
	ER25	3440305		●	●																						
	ER25	3440505				●																					
	ER32	3440506				●																					
	ER25	3441305					●	●																			
	ER32	3441306					●	●																			
BISON collet chuck	16C	3450246																		●							
Collet chuck	5C - No. 4	3441554							●	●	●	●															
	5C - No. 5	3441555											●	●	●												
	5C - No. 6	3441556														●	●	●									
	5C - No. 8	3441558																	●			●	●	●	●	●	●
Spring collet set	5C	3441509							●	●	●	●	●	●	●	●	●	●	●		●	●	●	●	●	●	●
Travelling centre	MT 2	3440702		●	●	●	●	●																			
	MT 3	3440703							●	●	●	●	●	●	●					●							
	MT 4	3440704														●	●	●	●		●						
	MT 5	3440705																				●	●	●	●	●	●
Travelling centre with replaceable tips	MT 2	3440732		●	●	●	●	●																			
	MT 3	3440733							●	●	●	●	●	●	●					●		●	●			●	●
	MT 4	3440734														●	●	●	●		●						
BISON Travelling centre	MT 2	3451002	●	●	●	●	●																				
	MT 3	3451003						●	●	●	●	●	●	●											●		
	MT 4	3451004													●	●	●	●	●		●						
	MT 5	3451005																		●		●	●	●		●	●
Spring collet set	ER 16	3440282	●																								
	ER 25	3441109		●	●	●	●	●																			
	ER 32	3441122		●	●	●	●	●																			
Collet chuck device	5C	3441506									●																
	5C	3441507														●											
Position stop		3441522									●																
		3441523											●														
		3444022																●	●								
		3444023																						●	●		
Fixed steady		3440211	●																								
		3440231		●																							
		3440361			●																						
		3440515																									
		3441315				●	●																				
		3441415						●																			
		3441461							●																		
		3441470								●																	
Travelling steady		3440210	●																								
		3440230		●																							
		3440360			●																						
		3441310				●	●																				
		3441410						●																			
		3441460							●																		
		3441469								●																	
Universal coolant unit		3351999	●	●	●	●	●	●	●	●	●	●	●	L	L	L	L	L	L	L	L	L	L	L	L	L	L
Digital position display	DRO 5	3383975			●	●	●	●	●	●																	

This equipment table covers all recommended equipment options. Depending on the individual case, use of accessories can be meaningful beyond this.

OPTIMUM Three-jaw lathe chuck

DIN 6350

CAST

OPTIMUM Three-jaw lathe chuck	Article no.
› **Centre clamping**	
› Cylindrical centring mount as per DIN 6350	
› Concentricity better than 0.05 mm	
› Chuck flange required see page 228	
Ø 80 mm	3440287
Block jaw set, soft, single piece	3442902
Ø 100 mm	3442710
Block jaw set, soft, single piece	3442904
Ø 125 mm	3442712
Block jaw set, soft, single piece	3442906
Ø 160 mm	3442716
Block jaw set, soft, single piece	3442907

Contents of package
› Single-piece hard jaws with outside-inside clamping
› Chuck key



DIN 55029

CAST

Camlock

OPTIMUM® Three-jaw lathe chuck	Article no.
› **Centrically clamping** DIN ISO 702-2	
› DIN ISO 702-2	
› Camlock direct mount DIN 55029	
Ø 160 mm Camlock No. 4	3442761
Block jaw set, soft, single piece	3442907
Ø 200 mm Camlock No. 4	3442762
Block jaw set, soft, single piece	3442910
Ø 200 mm Camlock No. 5	3442764
Block jaw set, soft, single piece	3442910
Ø 200 mm Camlock No. 6	3442763
Block jaw set, soft, single piece	3442910
Ø 250 mm Camlock No. 6	3442765
Block jaw set, soft, single piece	3442912
Ø 315 mm Camlock No. 8	3442768
Block jaw set, soft, single piece	3442916

Contents of package
› Single-piece hard jaws with outside-inside clamping
› Chuck key

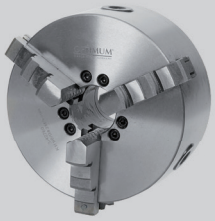

OPTIMUM Four-jaw lathe chuck

DIN 6350

CAST

OPTIMUM Four-jaw lathe chuck	Article no.
› **Centre clamping**	
› Cylindrical centring mount as per DIN 6350	
› Concentricity better than 0.05 mm	
› Chuck flange required see page 228	
Ø 80 mm	3442808
Block jaw set, soft, single piece	3442920
Ø 100 mm	3442810
Block jaw set, soft, single piece	3442922
Ø 125 mm	3442812
Block jaw set, soft, single piece	3442924
Ø 160 mm	3442816
Block jaw set, soft, single piece	3442926

OPTIMUM® Four-jaw lathe chuck	Article no.
› **Individual clamping**	
Ø 80 mm	3440286
Ø 100 mm	3442872
Ø 125 mm	3442874

Contents of package
› Chuck key
Lathe chuck centrically clamping:
› Hard jaws, single-part, with outside-inside clamping
Lathe chuck single clamping:
› Set of hard reversible jaws



Technical data for Lathe chucks, see page 220 „Chuck flange“ on page 228

DIN 55029

CAST

Camlock

OPTIMUM® Four-jaw lathe chuck	Article no.
› **Centre clamping**	
› DIN ISO 702-2	
› Camlock direct mount DIN 55029	
Ø 160 mm Camlock No. 4	3442840
Block jaw set, soft, single piece	3442926
Ø 200 mm Camlock No. 4	3442843
Block jaw set, soft, single piece	3442927
Ø 200 mm Camlock No. 5	3442845
Block jaw set, soft, single piece	3442927
Ø 200 mm Camlock No. 6	3442846
Block jaw set, soft, single piece	3442928
Ø 250 mm Camlock No. 6	3442852
Block jaw set, soft, single piece	3442935
Ø 315 mm Camlock No. 8	3442856
Block jaw set, soft, single piece	3442938

OPTIMUM® Four-jaw lathe chuck	Article no.
› **Individual clamping**	
Ø 200 mm Camlock No. 4	3442879
Ø 200 mm Camlock No. 5	3442880
Ø 250 mm Camlock No. 6	3442884
Ø 315 mm Camlock No. 8	3442888
Ø 400 mm Camlock No. 8	3442890

Contents of package
› Chuck key
Lathe chuck centrically clamping:
› Hard jaws, single-part, with outside-inside clamping
Lathe chuck single clamping:
› Set of hard reversible jaws



Three-jaw lathe chuck

DIN 6350

CAST

BISON Three-jaw lathe chuck	Article no.
› **Centre clamping**	
› All work surfaces induction tempered and polished	
› Permanently high clamping and repetition accuracy	
› Uniform clamping forces	
› High concentricity (better than DIN 6386)	
Ø 125 mm	3450230
Block jaw set, soft	3450410
Ø 160 mm	3450232
Block jaw set, soft	3450412

STEEL

BISON Three-jaw lathe chuck	Article no.
› **Centre clamping**	
Ø 250 mm	3450530
Block jaw set, soft	3450426

Contents of package
› Single-piece hard jaws with outside-inside clamping
› Chuck key





DIN 55029

CAST

Camlock

BISON Three-jaw lathe chuck	Article no.
› **Centre clamping**	
› DIN ISO 702-2	
› All work surfaces induction tempered and polished	
› Camlock direct mount DIN 55029	
› High concentricity (better than DIN 6386)	
Ø 160 mm Camlock No. 4	3450305
Block jaw set, soft	3450412
Ø 200 mm Camlock No. 4	3450310
Block jaw set, soft	3450414
Ø 200 mm Camlock No. 5	3450315
Block jaw set, soft	3450414
Ø 200 mm Camlock No. 6	3450320
Block jaw set, soft	3450414
Ø 200 mm DIN 6350 A2-5	3450210
Block jaw set, soft	3450414
Ø 250 mm Camlock No. 5	3450325
Block jaw set, soft	3450416
Ø 250 mm Camlock No. 6	3450330
Block jaw set, soft	3450416
Ø 250 mm Camlock No. 8	3450331
Block jaw set, soft	3450416
Ø 315 mm Camlock No. 8	3450335
Block jaw set, soft	3450418

Contents of package
› Hard jaws, single-part, with outside-inside clamping
› Chuck key

Four-jaw lathe chuck

DIN 6350

CAST

BISON Four-jaw lathe chuck	Article no.
› **Centre clamping**	
› All work surfaces induction tempered and polished to ensure a high level of clamping and repetition accuracy	
› Uniform clamping forces	
› High concentricity (better than DIN 6386)	
Ø 125 mm	3450234
Block jaw set, soft	3450420
Ø 160 mm	3450236
Block jaw set, soft	3450422

Contents of package
› Single-piece hard jaws with outside-inside clamping
› Chuck key





Chuck flange	Article no.
Ø 125 mm for three- and four-jaw lathe chucks Ø 125 mm	3450240
Ø 160 mm for three- and four-jaw lathe chucks Ø 160 mm	3450241
Ø 200 mm for three- and four-jaw lathe chucks Ø 200 mm	3450212
Ø 250 mm for three- and four-jaw lathe chucks Ø 250 mm	3450218

Technical data for Lathe chucks, see page 221

DIN 55029

CAST

Camlock

BISON Four-jaw lathe chuck	Article no.
› **Centre clamping**	
› DIN ISO 702-2	
Ø 160 mm Camlock No. 4	3450355
Block jaw set, soft	3450422
Ø 200 mm Camlock No. 4	3450360
Block jaw set, soft	3450424
Ø 200 mm Camlock No. 5	3450365
Block jaw set, soft	3450424
Ø 200 mm Camlock No. 6	3450370
Block jaw set, soft	3450424
Ø 250 mm DIN 6350 A2-5	3450216
Block jaw set, soft	3450426
Ø 250 mm Camlock No. 5	3450375
Block jaw set, soft	3450426
Ø 250 mm Camlock No. 6	3450380
Block jaw set, soft	3450426
Ø 250 mm Camlock No. 8	3450381
Block jaw set, soft	3450426
Ø 315 mm Camlock No. 8	3450385
Block jaw set, soft	3450428
Ø 400 mm Camlock No. 8	3450390
Block jaw set, soft	3450430

STEEL

BISON Four-jaw lathe chuck	Article no.
› **Centre clamping**	
Ø 250 mm Camlock No. 6	3450580
Block jaw set, soft	3450426
Ø 250 mm DIN 6350 A2-5	3450217
Block jaw set, soft	3450426

Contents of package
› Hard jaws, single-part, with outside-inside clamping
› Chuck key

OPTIMUM

Three-jaw lathe chuck

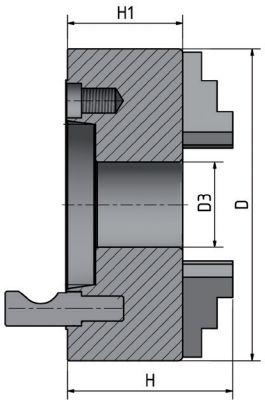

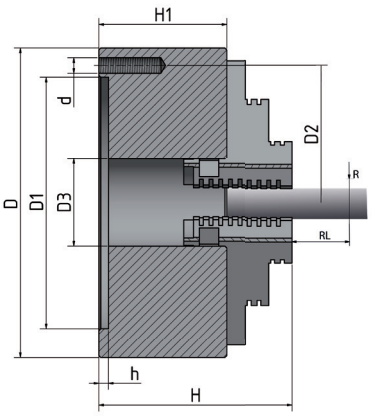

Chuck	Item No.	D	D1	D2	D3	d	H	H1	h	RL	Concentricity (R)	Rotational speed (rpm)
Ø 80 mm	3440287	80	55	66	16	M6	66	50	3.5	50	0.06	4 000
Ø 100 mm	3442710	100	72	84	22	M8	75	55	3.5	50	0.06	4 200
Ø 125 mm	3442712	125	95	108	30	M8	84	58	4	50	0.06	3 800
Ø 160 mm	3442716	160	130	142	45	M8	95	65	5	50	0.06	3 000

Chuck	Camlock	Item No.	D	D3	H	H1	Indexing circle	RL	Concentricity (R)	Rotational speed (rpm)
Ø 160 mm	No.4	3442761	160	40	101	71	82.6	50	0.06	3 000
Ø 200 mm	No.4	3442762	200	50	124	86	82.6	50	0.06	3 000
Ø 200 mm	No.5	3442764	200	52	124	86	104.8	50	0.06	3 000
Ø 200 mm	No.6	3442763	200	65	128	86	133.4	50	0.06	3 000
Ø 250 mm	No.6	3442765	250	70	140	98	133.4	50	0.06	2 400
Ø 315 mm	No.8	3442768	315	105	180	102.5	171.4	75	0.01	1 800

BISON

Three-jaw lathe chuck

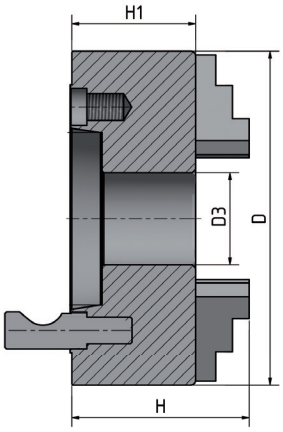

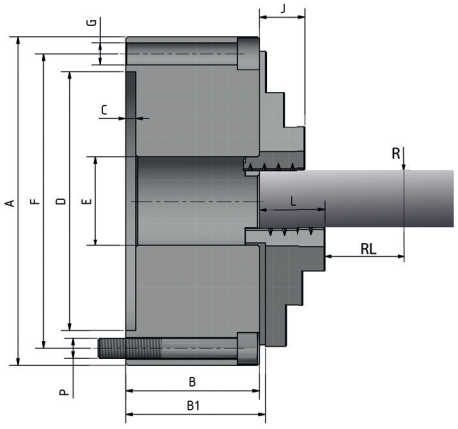

Chuck	Camlock	Item No.	D	D3	H1	H	Indexing circle	RL	Concentricity (R)	Rotational speed (rpm)
Ø 160 mm	No.4	3450305	160	42	81.5	124.5	82.6	60	0.03	3 600
Ø 200 mm	No.4	3450310	200	56	107	136	82.6	80	0.04	3 000
Ø 200 mm	No.5	3450315	200	56	107	136	104.8	80	0.04	3 000
Ø 200 mm	No.6	3450320	200	55	91	136	133.4	80	0.04	3 000
Ø 250 mm	No.5	3450325	250	76	103.5	156.5	104.8	80	0.04	2 500
Ø 250 mm	No.6	3450330	250	76	103.5	156.5	133.4	80	0.04	2 500
Ø 250 mm	No.8	3450331	250	76	103.5	156.5	171.4	80	0.04	2 500
Ø 315 mm	No.8	3450335	315	103	117.7	174.7	171.4	120	0.05	2 000

Chuck	Item No.	B	B1	C	D	E	F	G	J	L	kg	Rotational speed (rpm)
Ø 125 mm	3450230	56	60.8	4	95	32	108	3 x M8	20	40	5	4 000
Ø 160 mm	3450232	64.5	69.3	4	125	42	140	3 x M10	32	43	10	3 600

OPTIMUM

Four-jaw lathe chuck

Chuck	Item No.	D	D1	D2	D3	d	H	H1	h	Rotational speed (rpm)
Centre clamping										
Ø 80 mm	3442808	80	55	66	16	M6	66	50	3.5	4 300
Ø 100 mm	3442810	100	72	84	22	M8	75	55	3.5	3 400
Ø 125 mm	3442812	125	95	108	30	M8	84	58	4	2 750
Ø 160 mm	3442816	160	130	142	45	M8	95	65	5	2 150
Individual clamping										
Ø 80 mm	3440286	80	55	66	22	M6	59	42	4	4 800
Ø 100 mm	3442872	100	72	84	25	M8	75	54	4	3 500
Ø 125 mm	3442874	125	95	108	30	M8	78	58	6	3 000

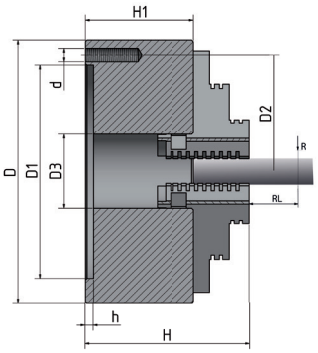

Chuck	Camlock	Item No.	D	D3	H	H1	RL	Concentri-city (R)	Indexing circle	Rotational speed (rpm)
Camlock centre clamping										
Ø 160 mm	No.4	3442840	160	40	95	71	50	0.06	82.6	2 150
Ø 200 mm	No.4	3442843	200	50	109	86	50	0.06	82.6	3 000
Ø 200 mm	No.5	3442845	200	52	109	86	50	0.06	104.8	3 000
Ø 200 mm	No.6	3442846	200	65	109	86	50	0.06	133.4	3 000
Ø 250 mm	No.6	3442852	250	70	120	98	50	0.06	133.4	2 400
Ø 315 mm	No.8	3442856	315	105	142.5	102.5	75	0.01	171.4	1 800
Camlock individual clamping										
Ø 200 mm	No.4	3442879	200	56	107	75	50	0.06	82.6	2 100
Ø 200 mm	No.5	3442880	200	56	107	75	50	0.06	104.8	2 100
Ø 250 mm	No.6	3442884	250	100	120	80	50	0.06	133.4	1 600
Ø 315 mm	No.8	3442888	320	95	134	100	75	0.01	171.4	1 200
Ø 400 mm	No.8	3442890	400	125	148	101	75	0.01	171.4	1 000

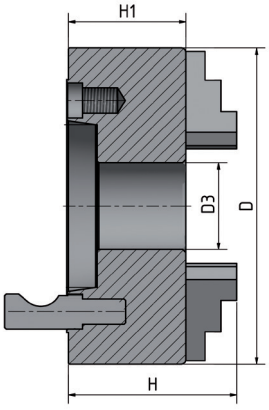

BISON

Four-jaw lathe chuck

Chuck	Camlock	Item No.	D	D3	H1	H	RL	Concen-tricity (R)	Indexing circle	Rotational speed (rpm)
Centre clamping										
Ø 160 mm	No.4	3450355	160	42	81.5	124.5	60	0.03	82.6	3, 600
Ø 200 mm	No.4	3450360	200	55	91	136	80	0.04	82.6	3 000
Ø 200 mm	No.5	3450365	200	55	91	136	80	0.04	104.8	3 000
Ø 200 mm	No.6	3450370	200	55	91	136	80	0.04	133.4	3 000
Ø 250 mm	No.5	3450375	250	76	103.5	156.5	80	0.04	104.8	2 500
Ø 250 mm	No.6	3450380	250	76	103.5	156.5	80	0.04	133.4	2 500
Ø 250 mm	No.8	3450381	250	76	103.5	156.5	80	0.04	171.4	2 500
Ø 315 mm	No.8	3450385	315	103	117.7	174.7	120	0.05	171.4	2 000
Ø 400 mm	No.8	3450390	400	136	128.5	207.5	120	0.06	171.4	1 600

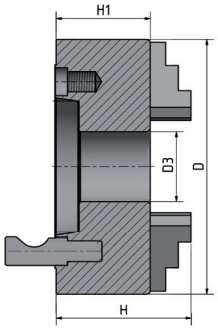

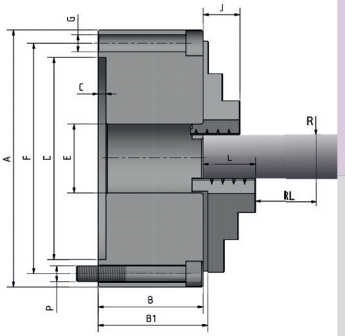

Chuck	Item No.	B	B1	C	H7	E	F	G	J	L	kg	Rotational speed (rpm)
Ø 125 mm	3450234	56	60.8	4	95	32	108	3 x M8	20	40	5	4 000
Ø 160 mm	3450236	64.5	69.3	4	125	42	140	3 x M10	32	43	10	3 600
Ø 250 mm	3450216	75	79.8	4	160	55	176	6 x M10	29	45	17.5	2 500
Ø 250 mm	3450217	75	79.8	4	160	55	176	6 x M10	29	45	17.5	3 500

Quick change tool holder

Quick change tool holder	Article no.
› Repetition accuracy 0.01 mm · angle scale on tool holder head	
› 40 different angle settings · Height adjustment via star knob	
› Tool holder head and tool holder with profile ground gears	
› Play-free and repetition-accurate clamping of the change holder	
› For self-assembly!	
Quick change tool holder set SWH AA	3384311
› Tool holder head AA	
› 3 units tool holder 12 x 50 type D for square chisels	
› 1 unit tool holder 12 x 50 type H for round chisels	
Spare tool holder 12 x 50 Type D for square chisels	3384312
Spare tool holder 12 x 50 Type H for round chisels	3384320
Quick change tool holder set SWH 1-A	3384301
› Tool holder head A	
› 3 units tool holder 20 x 90 type D for square chisels	
› 1 unit tool holder 20 x 85 type H for round chisels	
Spare tool holder 20 x 90 type D for square chisels	3384302
Spare tool holder 20 x 85 type H for round chisels	3384321
Quick change tool holder set SWH 3-E	3384303
› Tool holder head E	
› 3 units tool holder 20 x 100 type D for square chisels	
› 1 unit tool holder 30 x 100 type H for round chisels	
Spare tool holder 20 x 100 type D for square chisels	3384304
Spare tool holder 30 x 100 type H for round chisels	3384322
Quick change tool holder set SWH 5-B	3384305
› Tool holder head B	
› 3 units tool holder 25 x 120 type D for square chisels	
› 1 unit tool holder 32 x 130 type H for round chisels	
Spare tool holder 25 x 120 type D for square chisels	3384306
Spare tool holder 32 x 130 type H for round chisels	3384324
Quick change tool holder set SWH 7-C	3384307
› Tool holder head C	
› 3 units tool holder 32 x 150 type D for square chisels	
› 1 unit tool holder 40 x 160 type H for round chisels	
Spare tool holder 32 x 150 type D for square chisels	3384308
Spare tool holder 40 x 160 type H for round chisels	3384326
Quick change tool holder set SWH 9-D	3384309
› Tool holder head D	
› 3 units tool holder 40 x 180 type D for square chisels	
› 1 unit tool holder 63 x 180 type H for round chisels	
Spare tool holder 40 x 180 type D for square chisels	3384332
Spare tool holder 63 x 180 type H for round chisels	3384333
Factory assembly and adjustment SWH	
› Only with orders for new machines	
for **SWH AA / SWH 1-A**	9000401
for **SWH 3-E to SWH 9D**	9000400

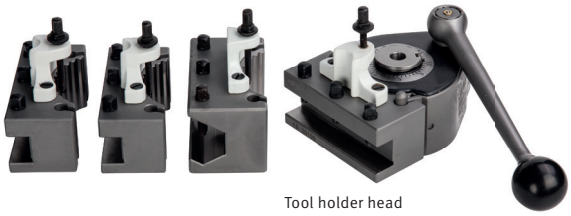

Tool holder head

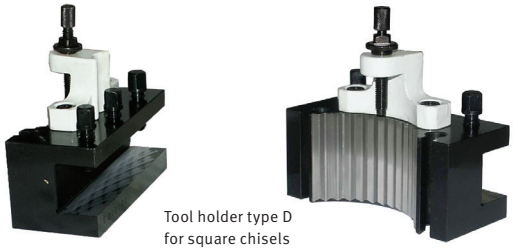

Tool holder type D
for square chisels

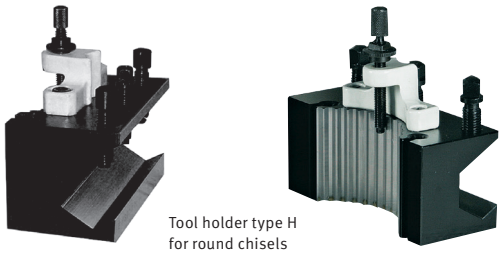

Tool holder type H
for round chisels

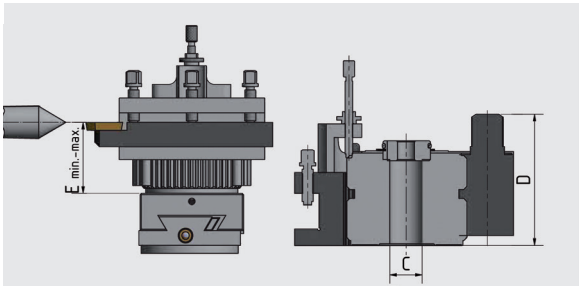

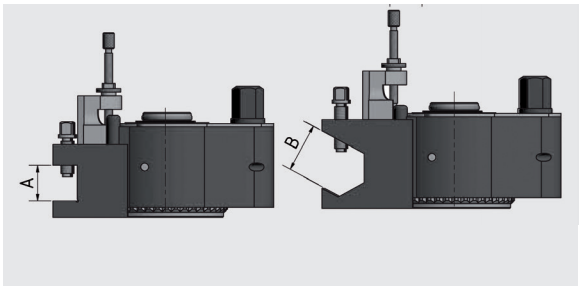

Tool holder head dimensions			SWH AA	SWH 1-A	SWH 3-E	SWH 5-B	SWH 7-C	SWH 9-D
Turning diameter		mm	120 - 220	150 - 300	200 - 400	300 - 500	400 - 700	600 - 800
Drive output lathe max.		kW	1	2	4.5	7	13	20
Support width square chisel max.	A	mm	12	20	20	25	32	40
Diameter round chisel max.	B	mm	Ø 12	Ø 20	Ø 20	Ø 25	Ø 32	Ø 40
Normal bore	C	mm	Ø 13	Ø 20	Ø 20	Ø 32	Ø 40	Ø 40
Height of base body/overall	D	mm	37	56	68	79	110	122
Height top carriage to lathe centre	E	mm	18 - 26	28.5 - 39.5	28.5 - 39.5	37 - 57	47 - 87	60 - 95

OPTIMUM® MASCHINEN - GERMANY

Lathe tool set HM 8 mm

Lathe tool set	Article no.
HM 8 mm	3441662
› 5-part	
› With HM turning plates	
› TiN coated	
› Aluminium box	

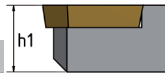

	ISO			
1	SWGC	L0808	D05	8 mm
2	SSDC	N0808	D06	8 mm
3	SWGC	R0808	D05	8 mm
4	STGC	R0808	D09	8 mm
5	SDJC	R0808	D07	8 mm



HM replacement turning plates (5 units each)

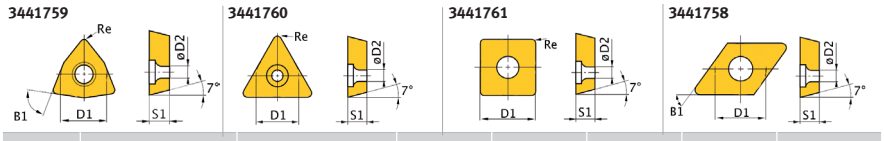

No.	Article no.	ISO	D1	D2	B1	S1	right
1/3	3441759	WCMT050308	7.94	3.2	80°	3.18	0.8
2	3441761	SCMT060204	6.35	2.8	90°	2.38	0.4
4	3441760	TCMT090204	5.56	2.5	60°	2.38	0.4
5	3441758	DCMT070204	6.35	2.8	55°	2.38	0.4

Lathe tool set HM 10 mm

Lathe tool set	Article no.
HM 10 mm	3441664
› 5-part	
› With HM turning plates	
› TiN coated	
› Aluminium box	

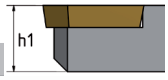

	ISO			
1	SWGC	L1010	E05	10 mm
2	SSDC	N1010	E06	10 mm
3	SWGC	R1010	E05	10 mm
4	STGC	R1010	E09	10 mm
5	SDJC	R1010	E07	10 mm



HM replacement turning plates (5 units each)

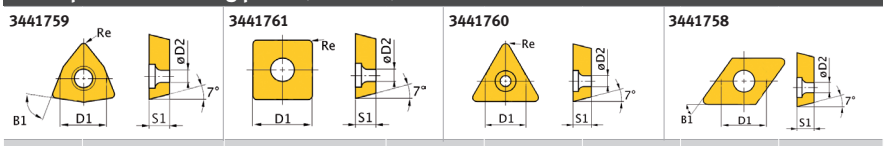

No.	Article no.	ISO	D1	D2	B1	S1	right
1/3	3441759	WCMT050308	7.94	3.2	80°	3.18	0.8
2	3441761	SCMT060204	6.35	2.8	90°	2.38	0.4
4	3441760	TCMT090204	5.56	2.5	60°	2.38	0.4
5	3441758	DCMT070204	6.35	2.8	55°	2.38	0.4

Lathe tool set HM 12 mm

Lathe tool set	Article no.
HM 12 mm	3441666
› 5-part	
› With HM turning plates	
› TiN coated	
› Aluminium box	

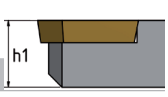

	ISO			
1	SWGC	L1212	H 05	12 mm
2	SSDC	N1212	H 09	12 mm
3	SWGC	R1212	H 05	12 mm
4	STGC	R1212	H 11	12 mm
5	SDJC	R1212	H 07	12 mm



HM replacement turning plates (5 units each)

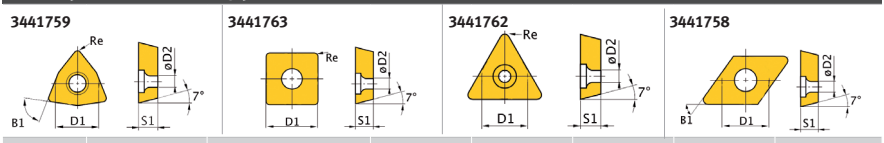

No.	Article no.	ISO	D1	D2	B1	S1	right
1/3	3441759	WCMT050308	7.94	3.2	80°	3.18	0.8
2	3441763	SCMT09T304	9.525	4.4	90°	3.97	0.4
4	3441762	TCMT110204	6.35	2.8	60°	2.38	0.4
5	3441758	DCMT070204	6.35	2.8	55°	2.38	0.4

Lathe tool set
HM 12 mm

Lathe tool set	Article no.
HM 12 mm	3441212
› 5-part	
› With HM turning plates	
› TiN coated	



HM replacement turning plates (5 units each)

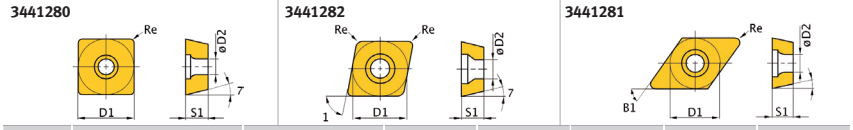

No.	Article no.	ISO	D1	D2	B1	S1	right
1	3441280	SCMT09T304	9.525	4.4	90°	3.97	0.4
2	3441282	CCMT09T304	9.525	4.4	80°	3.97	0.4
3-5	3441281	DCMT11T304	9.525	4.4	55°	3.97	0.4

	ISO	h1	Art.no.
1	SSSC R1212 J09	12 mm	3441220
2	SCLC R1212 J09	12 mm	3441221
3	SDNC N1212 J11	12 mm	3441222
4	SDJC R1212 J11	12 mm	3441223
5	SDJC L1212 J11	12 mm	3441224

Lathe tool 12 mm	Article no.
SSSC L1212J09	3441225
HM replacement turning plates (5 units each)	3441280

SCMT09T304	9.525	4.4	90°	3.97	0.4



Lathe tool 12 mm	Article no.
SCLC L1212J09	3441226
HM replacement turning plates (5 units each)	3441282

CCMT09T304	9.525	4.4	80°	3.97	0.4

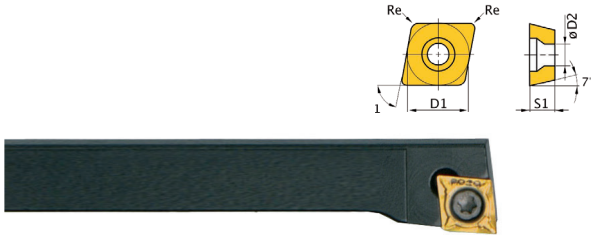

Lathe tool set
HM 16 mm

Lathe tool set	Article no.
HM 16 mm	3441216
› 5-part	
› With HM turning plates	
› TiN coated	



HM replacement turning plates (5 units each)

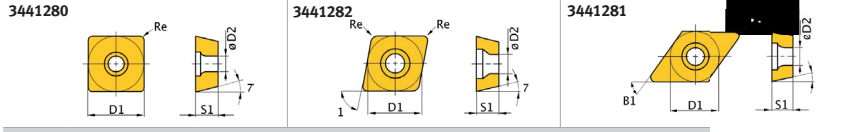

No.	Article no.	ISO	D1	D2	B1	S1	right
1	3441280	SCMT09T304	9.525	4.4	90°	3.97	0.4
2	3441282	CCMT09T304	9.525	4.4	80°	3.97	0.4
3-5	3441281	DCMT11T304	9.525	4.4	55°	3.97	0.4

	ISO	h1	Article no.
1	SSSC R1616 J09	16 mm	3441230
2	SCLC R1616 J09	16 mm	3441231
3	SDNC N1616 J11	16 mm	3441232
4	SDJC R1616 J11	16 mm	3441233
5	SDJC L1616 J11	16 mm	3441234

Lathe tool set HM 16 mm

Lathe tool set	Article no.
HM 16 mm	3441668
› 5-part	
› With HM turning plates	
› TiN coated	
› Aluminium box	

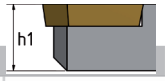

	ISO			
1	PWLN	R1616	H06	16 mm
2	PWLN	L1616	H06	16 mm
3	PSDNN	1616	H09	16 mm
4	CKJN	R1616	H16	16 mm
5	MDJN	R1616	H11	16 mm

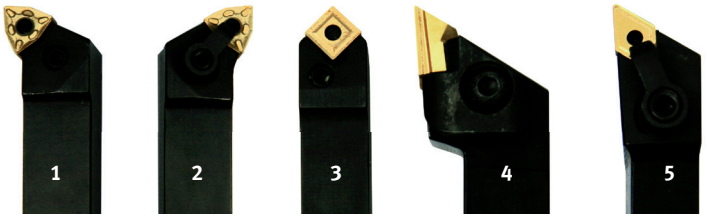

HM replacement turning plates (5 units each)

3441753

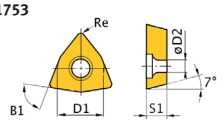

3441755

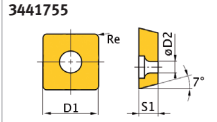

3441754

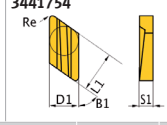

3441750

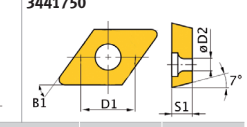

No.	Article no.	ISO	D1	D2	B1	S1	right	L1
1/2	3441753	WNMG060408	9.252	3.81	80°	4.76	0.8	-
3	3441755	SNMG090304	9.252	3.81	90°	3.18	0.4	-
4	3441754	KNUX160405R	9.252		55°	4.76	0.5	16.15
5	3441750	DNMG110408	9.525	3.81	55°	4.76	0.8	-

Lathe tool set HM 16 mm

Lathe tool set	Article no.
HM 16 mm	3441610
› 5-part	
› With HM turning plates	
› TiN coated	
› Aluminium box	



	ISO			
1	MVJNR	1616	H16	16 mm
2	MVVNN	1616	H16	16 mm
3	PRANN	1616	H10	16 mm
4	PRGNR	1616	H10	16 mm
5	SER	1616	H16	16 mm

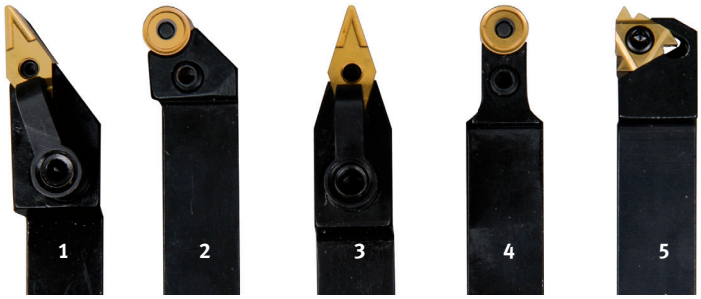

HM replacement turning plates (5 units each)

3441701

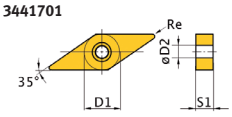

3441702

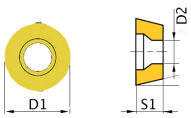

3441703

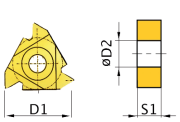

No.	Article no.	ISO	D1	D2	B1	S1	right
1/2	3441701	VNMG160408	9.525	3.81	35°	4.76	0.8
3/4	3441702	RNMG1003MO	10	3.6	-	3.97	-
5	3441703	16ER AG60	16	3.95	60°	3.65	-

Lathe tool set HM 20 mm

Lathe tool set	Article no.
HM 20 mm	3441670
› 5-part	
› With HM turning plates	
› TiN coated	
› Aluminium box	

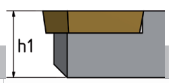

	ISO			
1	PWLN	R2020	08 grain	20 mm
2	PWLN	L2020	08 grain	20 mm
3	PSDN	N2020	12 grain	20 mm
4	CKJN	R2020	16 grain	20 mm
5	MDJN	R2020	11 grain	20 mm

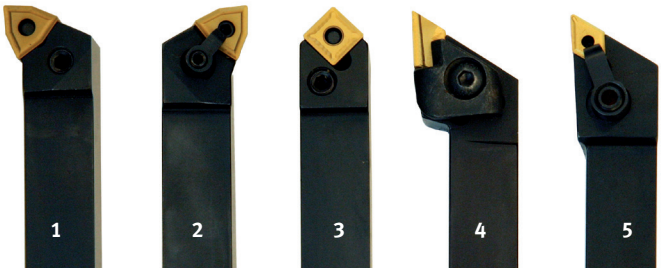

HM replacement turning plates (5 units each)

3441752

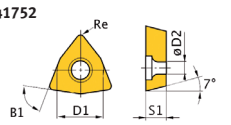

3441756

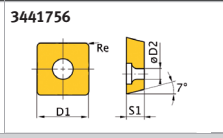

3441754

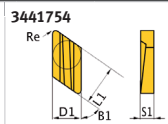

3441750

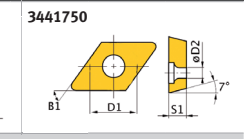

No.	Article no.	ISO	D1	D2	B1	S1	right	L1
1/2	3441752	WNMG080408	9.252	3.81	80°	4.76	0.8	-
3	3441756	SNMG120408	12.7	5.16	90°	4.76	0.8	-
4	3441754	KNUX160405R	9.252		55°	4.76	0.5	16.15
5	3441750	DNMG110408	9.525	3.81	55°	4.76	0.8	-

Lathe tool set
HM 20 mm

Lathe tool set	Article no.
HM 20 mm	3441617
› 5-part	
› With HM turning plates	
› TiN coated	
› Aluminium box	

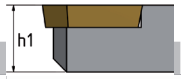

	ISO			
1	SER	2020	16 grain	20 mm
2	PRGNR	2020	10 grain	20 mm
3	PRANN	2020	10 grain	20 mm
4	MVVNN	2020	16 grain	20 mm
5	MVJNR	2020	16 grain	20 mm

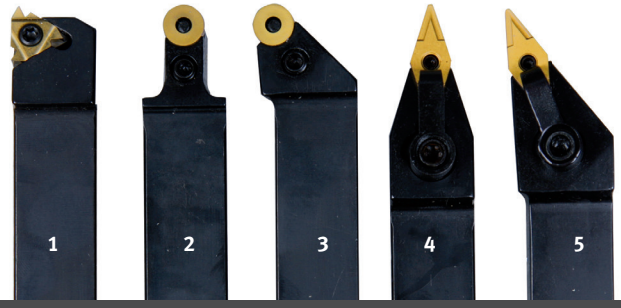

HM replacement turning plates (5 units each)

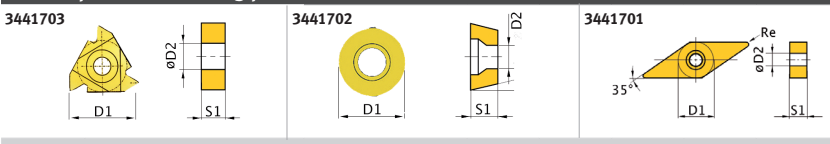

No.	Article no.	ISO	D1	D2	B1	S1	right
1	3441703	16ER AG60	16	3.95	60°	3.65	-
2/3	3441702	RNMG1003MO	10	3.6	-	3.97	-
4/5	3441701	VNMG160408	9,525	3.81	35°	4.76	0.8

Lathe tool set
HM 25 mm

Lathe tool set	Article no.
HM 25 mm	3441623
› 5-part	
› With HM turning plates	
› TiN coated	
› Aluminium box	



	ISO			
1	MVVN	N2525	M16	25 mm
2	SE	R2525	M16	25 mm
3	PRGN	R2525	M12	25 mm
4	PRAN	N2525	M16	25 mm
5	MVJN	R2525	M16	25 mm



HM replacement turning plates (5 units each)

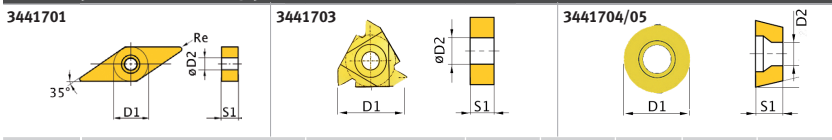

No.	Article no.	ISO	D1	D2	B1	S1	right
1/2	3441701	VNMG160408	9,525	3.81	35°	4.76	0.8
3	3441703	16ER AG60	16	3.95	60°	3.65	-
4	3441705	RNMG1204MO	12	4.75	R	5.1	-
5	3441704	RNMG1605MO	16	5.4	R	6.3	-

Lathe tool set
HM 25 mm

Lathe tool set	Article no.
HM 25 mm	3441672
› 5-part	
› With HM turning plates	
› TiN coated	
› Aluminium box	

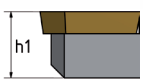

	ISO			
1	PWLN	L2525	M08	25 mm
2	PSDN	N2525	M15	25 mm
3	PWLN	R2525	M08	25 mm
4	CKJNR	R2525	M16	25 mm
5	MDJN	R2525	M15	25 mm

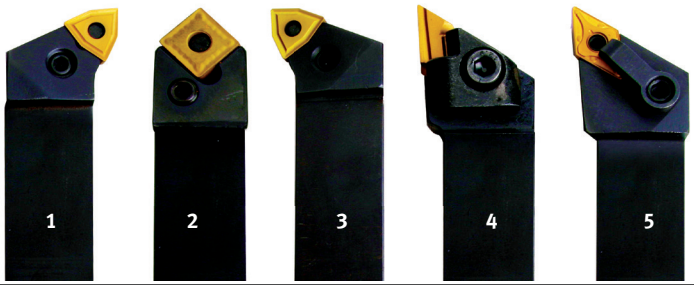

HM replacement turning plates (5 units each)

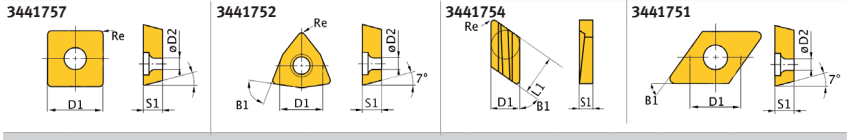

No.	Article no.	ISO	D1	D2	B1	S1	right	L1
1/2	3441752	WNMG080408	9.252	3.81	80°	4.76	0.8	-
3	3441757	SNMG150608	15.875	6.35	90°	6.35	0.8	-
4	3441754	KNUX160405R	9.252	-	55°	4.76	0.5	16.15
5	3441751	DNMG150408	12.7	5.16	55°	4.76	0.8	-

Lathe tool set HM 32 mm

Lathe tool set	Article no.
HM 32 mm	3441674
› 5-part	
› With HM turning plates	
› TiN coated	
› Aluminium box	

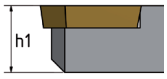

	ISO			
1	PWLN	L3232	P08	32 mm
2	PSDN	N3232	P15	32 mm
3	PWLN	R3232	P08	32 mm
4	CKJN	R3232	P16	32 mm
5	MDJN	R3232	P15	32 mm



HM replacement turning plates (5 units each)

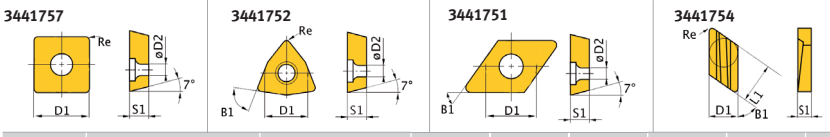

No.	Article no.	ISO	D1	D2	B1	S1	right	L1
1/3	3441752	WNMG080408	9.252	3.81	80°	4.76	0.8	-
2	3441757	SNMG150608	15,875	6.35	90°	6.35	0.8	-
4	3441754	KNUX160405R	9.252	-	55°	4.76	0.5	16.15
3	3441751	DNMG150408	12.7	5.16	55°	4.76	0.8	-

Inside lathe tool set 10 mm

Inside lathe tool set	Article no.
10 mm	3441640
› 3-part	
› With HM reversible plates, TIN-coated	
› Aluminium box	





No.	10 mm	10 mm		
1	S10K	S12M	SCFCR	06
2	S10K	S12M	SDQCR	07
3	S10K	S12M	STFCR	11

Inside lathe tool set 12 mm

Inside lathe tool set	Article no.
12 mm	3441641
› 3-part	
› With HM reversible plates, TIN-coated	
› Aluminium box	

HM replacement turning plates (5 units each)

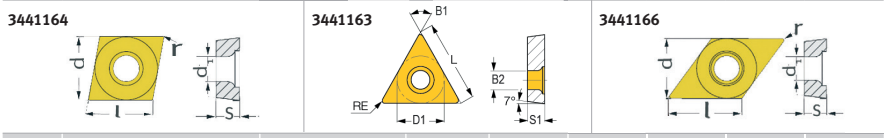

No.	Article no.	ISO		l	s	R	d	d1
1	3441164	CCMT060204	C/80°	6.35	2.60	0.40	6.35	2.70
2	3441163	TCMT110204	T/60°	10.84	2.53	0.40	9.1	2.70
3	3441166	DCMT070204	D/55°	7.30	2.53	0.40	6.35	2.70

Inside thread turning tool set 8 - 20 mm

Inside thread turning tool set	Article no.
8 - 20 mm	3441650
› 5-part (8/10/12/16/20 mm)	
› With HM turning plates	
› TiN coated	
› Aluminium box	

No.	ISO			d
1	S10K	SIR 0008	H08	8 mm
2	S10K	SIR 0010	11 grain	10 mm
3	S10K	SIR 0012	M11	12 mm
4	S10K	SIR 0016	P16	16 mm
5	S10K	SIR 0020	S16	20 mm





HM replacement turning plates (5 units each)

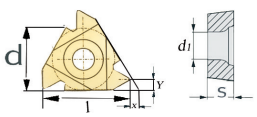

No.	Article no.	ISO		l	s	R	d	d1
1	3441725	08IR A60	60° IR	8	2.22	4.76	2.5	M10
2/3	3441726	11IR A60	60° IR	11	3.22	6.35	3.0	M12
4/5	3441727	16IR A60	60° IR	16	3.65	9.5	3.95	M16

Lathe tool set
8 / 10 / 12 / 16 mm

Accessories	Article no.
Lathe tool set HM 8 mm	3441601
11-part . With HM plates soldered on	
Lathe tool set HM 10 mm	3441602
11-part . With HM plates soldered on	
Lathe tool set HM 12 mm	3441603
11-part . With HM plates soldered on	
Lathe tool set HM 16 mm	3441604
11-part . With HM plates soldered on	

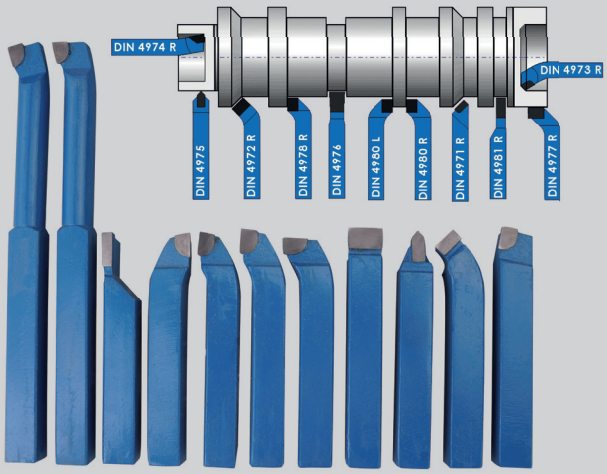

Clamping disc	Article no.
Ø 170 mm for TU 2004V/TU 2304	3440295
Ø 240 mm for TU 2406	3440552
Ø 240 mm for TU 2506	3441352
Ø 265 mm for TU 2807	3441452
Ø 300 mm Camlock DIN ISO 702-2 No. 4	3442976
Ø 320 mm A 2-5	3442979
Ø 330 mm Camlock DIN ISO 702-2 No. 5	3442978
Ø 350 mm Camlock DIN ISO 702-2 No. 6	3442980
Ø 450 mm Camlock DIN ISO 702-2 No. 8	3442982



Collet chuck	Article no.
With short taper mount	
ER 16 Ø 22 mm	3440281
› **Cylindrical** for TU 1503V	
ER 25 Ø 72 mm	3440305
› **Cylindrical** for TU 2004V / TU 2304	
ER 25 Ø 52 mm	3440505
› **Cylindrical** for TU 2406	
ER 32 Ø 52 mm	3440506
› **Cylindrical** for TU 2406	
ER 25 Ø 52 mm	3441305
› **Cylindrical** for TU 2506 / TU 2807	
ER 32 Ø 52 mm	3441306
› **Short taper** for TU 2506 / TU 2807	

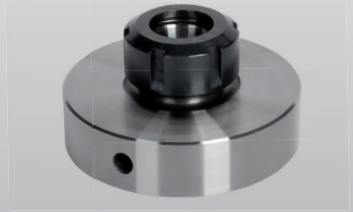

Chuck flange	Article no.
› For lathe chuck assembly	
Ø 160 mm Camlock DIN ISO 702-2 No. 4	3441512
› for four-jaw lathe chucks Ø 160 mm	
Ø 200 mm Camlock DIN ISO 702-2 No. 4	3441513
› for four-jaw lathe chucks Ø 200 mm	
Ø 200 mm Camlock DIN ISO 702-2 No. 5	3441514
› for four-jaw lathe chucks Ø 200 mm	
Ø 200 mm Camlock DIN ISO 702-2 No. 6	3444012
› for four-jaw lathe chucks Ø 200 mm	
Ø 250 mm Camlock DIN ISO 702-2 No. 6	3444013
› for four-jaw lathe chucks Ø 250 mm	
Ø 315 mm Camlock DIN ISO 702-2 No. 8	3444041
› for three- and four-jaw lathe chucks Ø 315 mm	

Chuck flange	Article no.
› For lathe chuck assembly	
Ø **100 mm**	3440312
› Cylindrical for TU 2004V	
Ø **125 mm**	3440313
› Cylindrical for TU 2304	
Ø **125 mm**	3440511
› Cylindrical for TU 2406	
Ø **125 mm**	3441312
› Short taper for TU 2506 / TU 2807	
Ø **160 mm**	3441413
› Short taper for TU 2807	

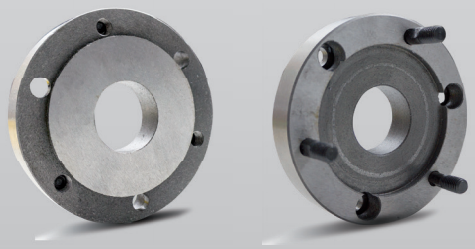

Accessories	Article no.
Clamping block set 16-05	3440653

Lathes: TU 3008 / TH 3309 / TH 3610

› 1 unit clamping block SLTBN 16-05
› 1 item each parting off tool SLIH 26-2 / SLIH 26-3
› 5 units cutting inserts GTN2 (cutting width 2.2 mm)
› 5 units cutting inserts GTN3 (cutting width 3.1 mm)
› Aluminium box

Clamping block set 20-05	3440654

Lathes: TH 4010 / TH 4210 / TH 46 / TH 56

› 1 unit clamping block SLTBN 20-05
› 1 item each parting off tool SLIH 26-3 / SLIH 26-4
› 5 units cutting inserts GTN3 (cutting width 3.1 mm)
› 5 units cutting inserts GTN4 (cutting width 4.1 mm)
› Aluminium box

Clamping block set 25-05	3440655

For lathes:TH 66 / TH 80

› 1 unit clamping block SLTBN 25-05
› 1 item each parting off tool SLIH 26-3 / SLIH 26-4
› 5 units cutting inserts GTN3 (cutting width 3.1 mm)
› 5 units cutting inserts GTN4 (cutting width 4.1 mm)
› Aluminium box

Replacement cutting insert set (10 units)	Article no.
for cutting inserts **GTN 2**	3440663
for cutting inserts **GTN 3**	3440664
for cutting inserts **GTN 4**	3440665

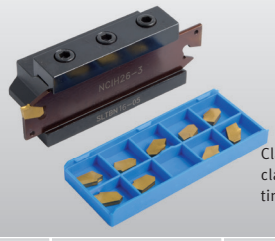

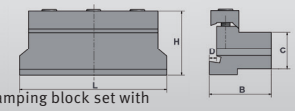

Clamping block set with clamping inserts and parting off tool

Clamping block	16-05	20-05	25-05
L x W x H	88 x 38 x 42 mm	88 x 38 x 43 mm	100 x 42 x 43.5 mm
C	16 mm	20 mm	25 mm
D	4 mm	5 mm	5 mm

Pilot bit set	3203010

› As per DIN 333 shape A
› 10-part: 0.75/1/1.5/1.6/2/2.5/3/3.15/4/5 mm
› Right-hand cutting chisel edge 120°
› Countersinking angle 60°
› Top quality HSS for tensile strength up to approx. 750 N/mm^2
› Powerful shank, also well suited for predrilling and expansion drilling with a twist drill bit
› Practical OPTIMUM plastic case



Work mats – for dry and wet areas	Article no.

MADE IN GERMANY

› Fire-resistant
› Made of polyurethane on polyether basis
› Surface: nubbed and underside nubbed: for maximum standing comfort and slip resistance
› Thickness 14 mm
› Colour anthracite
› Temperature resistance -35°C to +95°C
› Fire classification B1 as per DIN 4102
› 5-year warranty

Work mat 1 840 x 640 mm	6800000
Work mat 1 840 x 940 mm	6800005
Work mat 3 040 x 640 mm	6800001
Work mat 3 040 x 940 mm	6800006

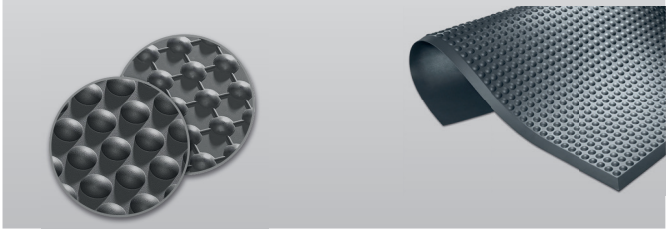

Hollow spindle stop	Article no.
› Optimum auxiliary tool suits virtually any lathe	
› Worthwhile even for smallest batches	
› Expensive tooling time can be reduced to a minimum	
› Can be easily and quickly attached at any point of the hollow spindle	
HSP 38	3444410
› Spindle Ø Ø 35–42 mm	
HSP 52	3444415
› Spindle Ø Ø 48–56 mm	
HSP 80	3444420
› Spindle Ø 76–84 mm	
HSP 105	3444425
› Spindle Ø Ø 101–109 mm	



Collet chuck	Article no.
› for spring collets type 5C / 385E	
› as per DIN 6341	
› With spindle chuck as per DIN ISO 702-2	
› Concentricity 0.02 mm	
5C - Camlock no. 4	3441554
› a = 71 mm / Ø = 126 mm	
5C - Camlock Nr. 5	3441555
› a = 107.4 mm / Ø = 126 mm	
5C - Camlock no. 6	3441556
› a = 160 mm / Ø = 182 mm	
5C - Camlock no. 8	3441558
› a = 163 mm / Ø = 225 mm	

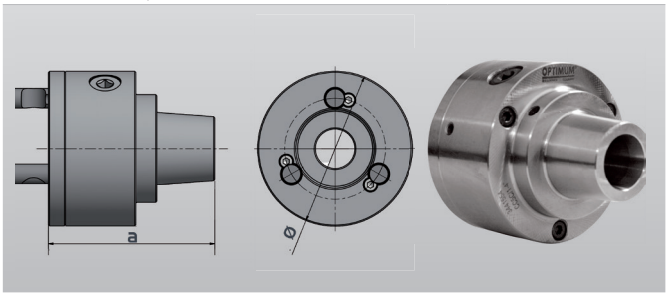

Levelling platen	Article no.
› The machines and equipment can be installed without anchors and precisely levelled using the height adjustment system.	
› non-slip rubberised	
SE 1	3381012
SE 2	3381016
SE 3	3381018

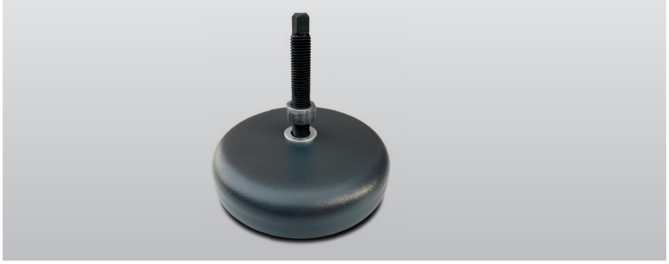

Load	SE 1	SE 2	SE 3
Milling machines	340 kg	460 kg	1 600 kg
Sawing/gen. Machine	570 kg	1 460 kg	3 500 kg
Thread	M12	M16	M20
Base Ø/Base height	120/32	160/35	185/39

Vibration damping machine base	Article no.
› Excellent vibration and structure-borne noise insulation	
› Noise reduction	
› Eliminates floor unevenness up to 5º	
› Precision levelling by means of a regular threaded screw	
› Better distribution of impact-like axial forces due to the geometrically larger contact surface with the screw	
› No notching effect - like for example with conical screw tips	
› The levelling screw and the levelling disc are captively connected by a very simple system.	
› Problem-free changeover of the machine possible, as the complete levelling disc remains on the machine foot when the machine is lifted	
SE 55	3352981
› Jackscrew M12 x 1 x 150	
› Maximum load: 600 kg	
SE 85	3352982
› Jackscrew M16 x 150	
› Maximum load: 1 500 kg	

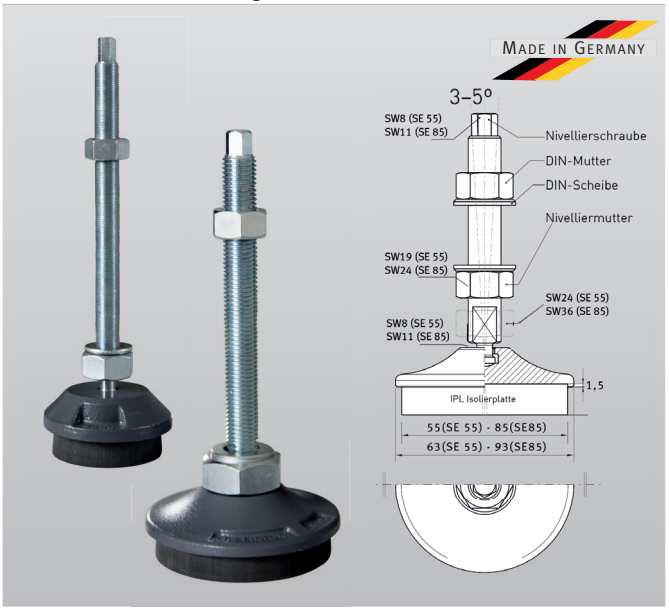

Fixed steady	Article no.
for **TU 1503V**	3440211
› a = Ø 40 mm; b = 145 mm; c = 70.5 mm	
for **TU 2004V**	3440231
› a = Ø 50 mm; b = 200 mm; c = 100 mm	
for **TU 2304 / TU 2304V**	3440361
› a = Ø 55 mm; b = 220 mm; c = 115 mm	
for **TU 2406 / TU 2506**	3441315
› a = Ø 50 mm; b = 245 mm; c = 125 mm	
for **TU 2807 / TU 2807V**	3441415
› a = Ø 55 mm; b = 250 mm; c = 140 mm	
for **TU 3008 / TU 3008G / TU 3008V**	3441461
› a = Ø 60 mm; b = 260 mm; c = 157 mm	

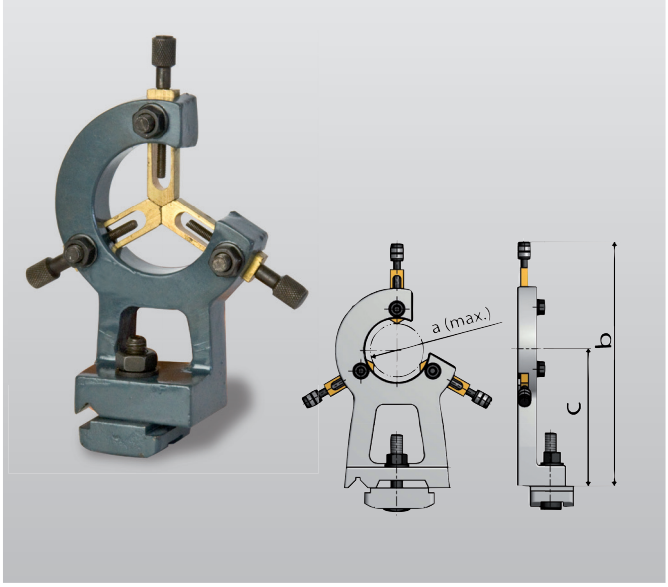

Travelling steady	Article no.
for **TU 1503V**	3440210
› a = Ø 45 mm; b = 155 mm; c = 76 mm	
for **TU 2004V**	3440230
› a = Ø 40 mm; b = 195 mm; c = 100 mm	
for **TU 2304 / TU 2304V**	3440360
› a = Ø 34 mm; b = 200 mm; c = 97 mm	
for **TU 2406 / TU 2506**	3441310
› a = Ø 34 mm; b = 220 mm; c = 107 mm	
for **TU 2807 / TU 2807V**	3441410
› a = Ø 56 mm; b = 250 mm; c = 130 mm	
for **TU 3008 / TU 3008G / TU 3008V**	3441460
› a = Ø 60 mm; b = 255 mm; c = 151 mm	

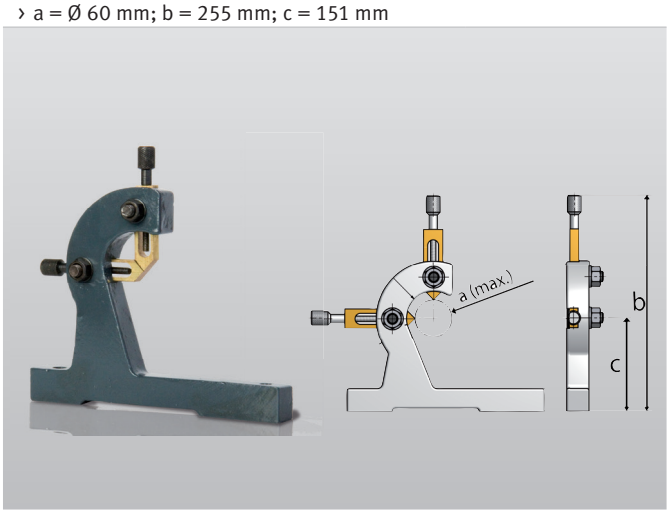

OPTIMUM®
MASCHINEN - GERMANY

POSITION DISPLAYS

DIGITAL POSITION DISPLAYS
MEASURING STRIPS
MEASURING INSTRUMENTS





DRO 5
Digital 3-axis position display



DRO 5	Article no. 3383975
› Digital 3-axis position display for milling machines (X - Y - Z) and for lathes (X, Z, Z_0)	
› For measuring positions	
› Rev counter	
› Three incremental inputs	
› Four-line LCD display	
› User-friendly menu navigation	
› Rugged aluminium housing	
› Programming from the front	
› Dimensions L x W x H: 98 x 65 x 134 mm	
Including	
› Speed sensor cable length 5 metres	
› 3 units magnetic sensors without magnetic strip	
› Power supply cable length 6 metres	
› Magnetic plate	

Accessories	Article no.
Magnetic strip length 1 100 mm	3383978
Magnetic strip length 2 000 mm	3383979
Magnetic strip per metre	3383980

Factory assembly	
Magnetic strip three axes	9000420
Speed sensor	9000421

Assembly kit	
TU 3008	3383985
MH 22V	3383990

The digital position displays for three axes with speed display support versatile use and are a genuine aid to the user, as they substantially boost precision and productivity.

Differences:

DPA 21
- LED display

DPA 22
- LCD display
- High-contrast display
- Simplified menu navigation
- Graphical input for cycle programming

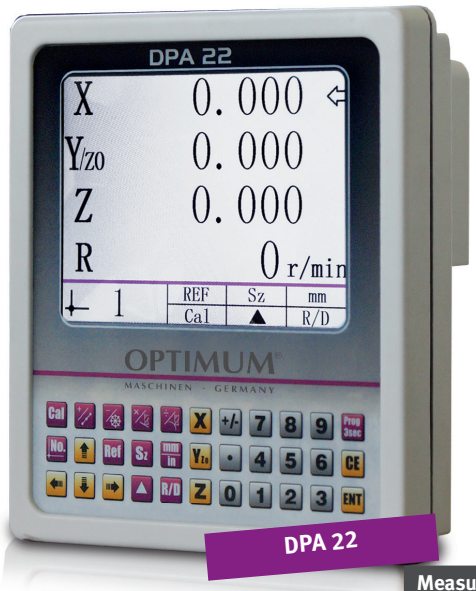



Digital position display	Article no.
DPA 21 (LED display)	3384020
DPA 22 (LCD display)	3384022
› User-friendly membrane keyboard, splash water protected, sealed and dazzle free	
› Switchable for milling machine and lathe, freely selectable input signal (sinus/square), e.g. usable for glass measuring probes and/or magnetic strip system	
› Greater operation accuracy	
› Clear reduction of manufacturing times	
› Reduction of error quota	
› X, Y/Z0, Z axis each with 8-digit display	
› Sensor supplied for acquiring spindle speeds	
› Three measuring inputs can be evaluated with seven correction memory stores each for tools	
› Dimensions L x W x H: 230 x 80 x 260 mm . Weight: 2 kg	

Possible functions

› Calculator, speed display, axis coupling (total Z), sub-D connector sockets, absolute/incremental operation, conversion inch/metric thread, bolt circle computation (chain dimension), coordinates in circle (pitch circle), drill holes in circle (pitch circle), measured values switchable radius/diameter, Zero reset data default, self diagnostics, reference point, linear error correction, 99 tool memory slots

Scope of delivery

› Speed sensor
› Holder
› Power supply 24 V

Magnetic strip

› Magnetic strip for assembly machines that do not have enough space for magnetic measuring probes
› Connector 9-pin

Length 1 100 mm	3383978
Length 2 000 mm	3383979
Active scanning head	3383934



Measuring strips	Article no.
› Fully encapsulated measuring systems with high precision glass measuring probe	
› Resolution 5 µm	
› Accuracy ± 0.003 mm	
› Sampling slide borne on miniature ball bearings and connected to the assembly base by a coupling	
› Protected against dust, chips and splash water by a rubber lip	
› Flexible metal protection hose	
› Connecting cable three metres; four metres as of ML 620	
› Without assembly	
ML 80 mm	3384108
ML 100 mm	3384110
ML 120 mm	3384112
ML 170 mm	3384117
ML 220 mm	3384122
ML 270 mm	3384127
ML 320 mm	3384132
ML 370 mm	3384137
ML 420 mm	3384142
ML 470 mm	3384147
ML 520 mm	3384152
ML 570 mm	3384157
ML 620 mm	3384162
ML 670 mm	3384167
ML 720 mm	3384172
ML 770 mm	3384177
ML 820 mm	3384182
ML 870 mm	3384187
ML 920 mm	3384192
ML 970 mm	3384197
ML 1 020 mm	3384202
ML 1 250 mm	3384225
ML 1 400 mm	3384240
ML 1 520 mm	3384252
ML 1 670 mm	3384267
ML 1 940 mm	3384294
ML 2 010 mm	3384295
ML 3 000 mm	3384300
Factory assembly ML	9000410

› Per measuring strip

NEW

OPTIMUM® MASCHINEN - GERMANY

Universally deployable digital position display for two or three axes with speed display
guarantees excellent results on machines and improves their precision

Digital position display	Article no.	€ plus VAT
DPA 31-2 for two axes	3384030	**449.00**
DPA 31-3 for three axes	3384031	**489.00**

› LED display
› User-friendly membrane keyboard, splash water protected, sealed and dazzle free
› Switchable for milling machine and lathe
› Greater operation accuracy
› Clear reduction of manufacturing times
› Reduction of error quota
› 8-digit display
› Sensor supplied for acquiring spindle speeds
› Three measuring inputs can be evaluated with seven correction memory stores each for tools
› Dimensions L x W x H: 230 x 80 x 260 mm
› Weight: 2 kg



DPA 31-2
DPA 31-3



Measuring strips MSS31	Article no.
› The electronic measuring components of the measuring strips are protected and sealed in the housing	
› Provides accurate and reliable measurement results even if the measuring system is operated in oil or coolant	
› Tolerant towards vibration and magnetic interference	
› Without assembly	
51 mm (length 311 mm)	3384405
102 mm (length 362 mm)	3384410
152 mm (length 412 mm)	3384415
203 mm (length 463 mm)	3384417
254 mm (length 514 mm)	3384419
305 mm (length 565 mm)	3384421
356 mm (length 616 mm)	3384422
406 mm (length 666 mm)	3384423
457 mm (length 717 mm)	3384424
506 mm (length 766 mm)	3384425
559 mm (length 819 mm)	3384426
610 mm (length 870 mm)	3384427
660 mm (length 920 mm)	3384428
711 mm (length 971 mm)	3384429
762 mm (length 1022 mm)	3384430
813 mm (length 1073 mm)	3384431
864 mm (length 1124 mm)	3384432
914 mm (length 1174 mm)	3384433
965 mm (length 1225 mm)	3384434
1 016 mm (length 1276 mm)	3384435
1 118 mm (length 1378 mm)	3384437
1 168 mm (length 1428 mm)	3384438
1 219 mm (length 1479 mm)	3384439
1 270 mm (length 1530 mm)	3384440
1 321 mm (length 1581 mm)	3384441
1 372 mm (length 1632 mm)	3384442
1 422 mm (length 1882 mm)	3384443
1 473 mm (length 1933 mm)	3384444
1 524 mm (length 1784 mm)	3384445
1 626 mm (length 1886 mm)	3384446
1 727 mm (length 1987 mm)	3384447
1 829 mm (length 2089 mm)	3384448
1 930 mm (length 2190 mm)	3384449
2 032 mm (length 2292 mm)	3384450
2 134 mm (length 2394 mm)	3384451
2 235 mm (length 2495 mm)	3384452
2 337 mm (length 2597 mm)	3384453
2 438 mm (length 2698 mm)	3384454
2 540 mm (length 2800 mm)	3384455
2 642 mm (length 2902 mm)	3384456
2 743 mm (length 3003 mm)	3384457
2 845 mm (length 3105 mm)	3384458
2 946 mm (length 3206 mm)	3384459
3 048 mm (length 3248 mm)	3384460

Accessories	Article no.
Extension cable 1 metres	3384040
Active scanning head	3384035



Magnetic strip	Article no.
› Magnetic strip for assembly machines that do not have enough space for magnetic measuring probes	
› Connector 9-pin	
Length 1 100 mm	3383978
Length 2 000 mm	3383979

DP700 digital position display for precise measurement of travel strokes and positioning on the machine and drives



	Article no.	€ plus VAT
Digital position display DP700	3390073	**879.00**
Extension kit - Spherosyn milling	3390220	**1 260.00**
› Digital position display DP700		
› fitting		
› Attachment parts for assembling three axes Spherosyn		
Extension kit - Microsyn milling	3390230	**1 350.00**
› Digital position display DP700		
› fitting		
› Attachment parts for assembling three axes Microsyn		
Extension kit - turning 1	3390405	**1 230.00**
› Digital position display DP700		
› fitting		
› Attachment parts for assembling one axis Spherosyn and one axis Microsyn greater than 300 mm		
Extension kit - turning 2	3390406	**1 200.00**
› Digital position display DP700		
› fitting		
› Attachment parts for assembling one axis Spherosyn and one axis Microsyn less than 300 mm		
Complete attachment kit MH 35G	3390330	**2 650.00**
› Digital position display DP700		
› 3 units measuring strip Microsyn		
› bracket . Attachment parts measuring strip assembly		
Complete attachment kit MH 50G	3390346	**2 690.00**
› Digital position display DP700		
› 3 units measuring strip Microsyn		
› bracket . Attachment parts measuring strip assembly		
Complete attachment kit TH 3309	3390420	**2 500.00**
› Digital position display DP700		
› 2 units measuring strip Microsyn · 1 unit measuring strip Spherosyn		
› bracket . Attachment parts measuring strip assembly		
Complete attachment kit TH 3610 / TH 4010	3390430	**2 480.00**
› Digital position display DP700		
› 2 units measuring strip Microsyn · 1 unit measuring strip Spherosyn		
› bracket . Attachment parts measuring strip assembly		

Digital position display DP700
› Powerful DP display with many functions
› Ergonomically shaped, slim-line aluminium housing
› Has all necessary functions for a variety of machining applications
› The operator works with an intuitive and user-friendly interface
› Developed and manufactured in England
› IP67 encoding units can be deployed under the toughest ambient conditions with a high degree of precision.
› Five-year warranty on indicator and read heads
› The linear encoding units are insensitive to soiling in the workshop, such as coolant, water, dust, chips, knocks and vibrations
› No maintenance required
› Fast and easy installation

Possible functions		
Number of axes	2 or 3 axes	
	Milling machine	Lathe
Undo	•	•
Digfind (position search function)	•	•
Centrefind	•	•
Radius/diameter	•	•
Absolute/steps	•	•
mm/inch	•	•
Axes preset/zero set	•	•
Approach zero point	•	•
Tool repository		•
Taper		•
Axis addition		•
PCD/bolt circle	•	
Arc control	•	
Polar coordinates	•	
Slotted rail	•	
Input mode/Sub-datum	•	•
Feed function	•	•
RS232 output	•	•
Linear error compensation	•	•
Segmental error compensation	•	•
Protection classes	IP 40 (digital display)	
	IP 54 (front control panel)	
Languages	DE, EN, FR, ES, IT, TU, TR, CZ, RU, PT, DK	

OPTIMUM®
MASCHINEN - GERMANY

Analogue measuring systems (Spherosyn & Microsyn)

The Spherosyn and Microsyn length measuring systems are specially designed for requirements in the demanding environment of a workshop. The measuring transducers use a totally unique design with all components sealed and protected. This means that you can achieve precise and reliable measured values, even if the measuring systems are immersed in coolant, oil water or lubricant.



The advantages

- Easy to install – low assembly costs
- Degree of protection IP 67
- Impermeable to coolants, oil, dust, chips and almost all workshop influences
- No risk of broken or scratched glass
- Tolerant towards vibration and magnetic interference
- No regular maintenance or cleaning needed
- No mechanical wear
- Lifetime guarantee on the measuring probe

Worldwide, more than 400 000 Spherosyn and Microsyn transducers offer the highest degree of reliability.

Spherosyn and Microsyn can be used both for the digital position display DP700 and also be integrated for a variety of feedback applications, such as CNC systems and PLC.

How does that work?
The Spherosyn and Microsyn measuring probes rely on the principle of electro-magnetism and consist of a stainless steel or carbon fibre cube filled with individual, classified, highly precise steel balls. The balls are pre-stressed and calibrated in a temperature-controlled environment in the tube.

The read had consists of six coils which are wound around a composite fibre coil. The coils and the required electronic circuitry are sealed on the inside of the read ahead by a special potting method. Applying voltage to the coil generates an electro-magnetic field in the read head. Due to the curvature of the balls on the inside of the tube, the output signal varies depending on the position of the coils above the balls. When the measuring head runs over the probe, signals are generated by the relative axial movement induced at each probe coil.







Difference between Spherosyn and Microsyn measuring probes

Analogue measuring systems	Spherosyn	Microsyn
Measuring length	51 mm to 2 945 mm	30 mm to 1 000 mm
Scale	15.25 mm	6.5 mm
Measuring probe material	Stainless steel	Carbon fibre
Measuring probe length, total	Measuring length + 250 mm	Measuring length + 175 mm
Read head dimensions	51 mm x 131 mm x 28 mm	35 mm x 75 mm x 20 mm
Maximum feed	2.0 metres per second	0.75 metres per second
Output cable length	3.5 metre stainless steel armouring (Extension cable available as accessory page 208)	
Precision	+/- 10 micron	
Repetition accuracy	Within one resolution sample	
Drive input	85mA +/-5mA	
Output	2.0 V +/-0.5 RMS, 1 kHz phase-analogue, 360 degrees per 12.7 mm	
Suitable	For large machines and machines without space problems when fitting the probes	For small machines with space problems when fitting the probes

Analogue measuring systems (Spherosyn & Microsyn)



Fig.: **Spherosyn with optional fastening**



Fig.: **Microsyn with optional fastening**

Measuring strips Spherosyn	Article no.
MS S2G - 51 mm	3391005
MS S2G - 102 mm	3391010
MS S2G - 152 mm	3391015
MS S2G - 178 mm	3391018
MS S2G - 203 mm	3391020
MS S2G - 229 mm	3391023
MS S2G - 254 mm	3391025
MS S2G - 305 mm	3391030
MS S2G - 356 mm	3391035
MS S2G - 406 mm	3391040
MS S2G - 457 mm	3391046
MS S2G - 508 mm	3391051
MS S2G - 559 mm	3391056
MS S2G - 610 mm	3391061
MS S2G - 660 mm	3391066
MS S2G - 711 mm	3391071
MS S2G - 762 mm	3391076
MS S2G - 813 mm	3391081
MS S2G - 864 mm	3391086
MS S2G - 914 mm	3391091
MS S2G - 965 mm	3391097
MS S2G - 1 016 mm	3391101
MS S2G - 1 118 mm	3391111
MS S2G - 1 168 mm	3391117
MS S2G - 1 219 mm	3391121
MS S2G - 1 270 mm	3391127
MS S2G - 1 321 mm	3391132
MS S2G - 1 372 mm	3391137
MS S2G - 1 422 mm	3391142
MS S2G - 1 473 mm	3391147
MS S2G - 1 524 mm	3391152
MS S2G - 1 626 mm	3391162
MS S2G - 1 727 mm	3391172
MS S2G - 1 829 mm	3391182
MS S2G - 1 930 mm	3391193
MS S2G - 2 032 mm	3391203
MS S2G - 2 134 mm	3391213
MS S2G - 2 235 mm	3391223
MS S2G - 2 337 mm	3391233
MS S2G - 2 438 mm	3391243
MS S2G - 2 540 mm	3391254
MS S2G - 2 642 mm	3391264
MS S2G - 2 743 mm	3391274
MS S2G - 2 845 mm	3391284
MS S2G - 2 946 mm	3391294

Measuring strips Microsyn	Article no.
MS M2G - 30 mm	3392003
MS M2G - 50 mm	3392005
MS M2G - 75 mm	3392007
MS M2G - 100 mm	3392010
MS M2G - 125 mm	3392012
MS M2G - 150 mm	3392015
MS M2G - 175 mm	3392017
MS M2G - 180 mm	3392018
MS M2G - 200 mm	3392020
MS M2G - 225 mm	3392022
MS M2G - 250 mm	3392025
MS M2G - 275 mm	3392027
MS M2G - 300 mm	3392030
MS M2G - 325 mm	3392032
MS M2G - 350 mm	3392035
MS M2G - 400 mm	3392040
MS M2G - 450 mm	3392045
MS M2G - 500 mm	3392050
MS M2G - 550 mm	3392055
MS M2G - 600 mm	3392060
MS M2G - 650 mm	3392065
MS M2G - 700 mm	3392070
MS M2G - 750 mm	3392075
MS M2G - 800 mm	3392080
MS M2G - 850 mm	3392085
MS M2G - 900 mm	3392090
MS M2G - 950 mm	3392095
MS M2G - 1 000 mm	3392100

Accessories	Article no.
Extension cable 1 metres	3393601
Extension cable 2 metres	3393602
Extension cable 3.5 metres	3393603
Extension cable 5 metres	3393604
Extension cable 10 metres	3393605

METAL-CUTTING BAND SAWS
METAL-CUTTING CIRCULAR SAWS



OPTIsaw® SQ-V10

NEW

quantum® MASCHINEN - GERMANY

DIY

VARIO

This **manual band saw** can either be installed on the optional work table with vise or guided manually

Facts that impress in terms of quality, performance and price

- Powerful 1.1 kW motor
- Ideally suited for sawing solid steel materials with low tensile strength, preferably for sawing off pipes, steel sections, aluminium and non-ferrous metals.
- Also suitable for cutting wood, plastics and other thin non-ferrous metals
- Strong bridge construction with aluminium frame
- Variable saw band speed for various materials
- Easy-to-operate saw blade clamps and adjusting screws ensure permanently precise band run
- The saw supports virtually spark-free sawing without coolant and is thus easy on the material
- LED work light illuminates dark work areas for precise cutting
- Reduced cutting noise
- Always the right working position thanks to the adjustable additional grip
- Transport case
- Removable from optional worktable for flexible use

Controller



› for variable speed adjustment between 42 and 144 m/min.





Optional accessories
Work table
› Includes vise
› Net weight 13 kg
Art no. 3184212

Contents of package
› Transport case
› Bi-metal saw band 10-14 teeth per inch M42

Model	SQ-V10
Article no.	3184210
Electrical connection	230 V/1 Ph ~50 Hz
Motor output	1.1 kW
Saw band speed	42 - 144 m/min
Saw band dimensions	1,140 x 13 x 0.65 mm
Length x width x height	465 x 280 x 165 mm
Net weight	6.6 kg

Cutting areas

with optional work table			
0°	Ø 115 mm	105 mm	100 x 115 mm
45°	Ø 45 mm	40 mm	30 x 45 mm
without optional work table			
0°	Ø 127 mm	127 mm	127 x 127 mm
45°	Ø 40 mm	40 mm	40 x 120 mm

Saw bands HSS bi-metal M 42

Teeth per inch	Article no.
10 - 14 tpi	3357548

Important information on „Operation of machines with frequency converters“ on page 323
The manual band saw (frequency converter) complies with the DIN EN 55011 standard: class C2

Transportable mitre bandsaws with excellent cutting precision, extremely low-noise. With continuously adjustable saw band speed

DIY VARIO GEARBOX

Facts that impress in terms of quality, performance and price

- Equipped as a factory standard with bi-metal saw blade
- Adjustable material stop for batch work
- Pushbutton on lever arm for saw band run switches the saw band run on and off
- Base plate with anti-slip feet
- Saw head swivels from 0° to +60° to allow angled sawing



available from January 2021



Optional accessories
Machine chassis MUG 1
› Stable, space-saving, folding, easy to transport
› Dimensions L x W x H: 500 x 470 x 780 mm
Art. no. 3630000

Mitre square

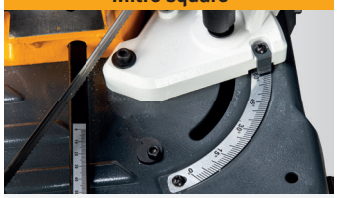

› Easily legible scale for adjusting the angle

Saw band guide



› Ball-bearing borne; for an excellent band run and thus optimal cutting

Pushbutton



› Pushbutton on lever arm for saw band run.
› Switches the saw band run on and off

Vario drive



› Continuously adjustable saw band speed from 30 to 80 m/min

Contents of package
› Material stop
› Bi-metal saw band

Model	SQ-V13
Article no.	3194013
Electrical connection	230 V/1 Ph ~50 Hz
Motor output	400 W
Saw band speed	30 - 80 m/min
Saw band dimensions	1,440 x 12.5 x 0.6 mm
Cutting angle	0° - 60°
Length of open/closed vise	795 / 670mm
Width without/with material stop	382 / 613 mm
Height bottom/top limit position	640 / 420 mm
Net weight	23.3 kg

Cutting areas

0 °	Ø 125 mm	125 mm	125 x 125 mm
45°	Ø 85 mm	85 mm	85 x 85 mm
60°	Ø 50 mm	50 mm	50 x 50 mm

The cutting area was determined for aluminium. It can vary when using different materials and may be smaller (not cutting capacity).

Saw bands HSS bi-metal M 42

Teeth per inch	Tooth angle	Article no.
6 - 10 tpi	0°	3351546
10 - 14 tpi	0°	3351547

Important information on „Operation of machines with frequency converters“ on page 323
The metal-cutting bandsaw (frequency converter) complies with the DIN EN 55011 standard: class C2

OPTIsaw® SP 11V / SP 13V

NEW

Transportable mitre bandsaws with excellent cutting precision, extremely low-noise. With continuously adjustable saw band speed

TRADES VARIO GEARBOX

Facts that impress in terms of quality, performance and price

- Equipped as a factory standard with bi-metal saw blade
- Adjustable material stop for batch work
- Pushbutton on lever arm for saw band run switches the saw band run on and off
- Base plate with anti-slip feet
- Low vibration and wear thanks to special gearbox with two hardened steel gears
- Vario drive motor with low speed and carbon brushes for up to 10x longer service life

SP 11V

- Saw head swivels from 0° to +45° to allow angled sawing

SP 13V

- Saw head swivels from 0° to +60° to allow angled sawing

Mitre square



› Easily legible scale for adjusting the angle

Saw band guide



› Ball-bearing borne; for an excellent band run and thus optimal cutting

Vario drive



› Saw band speed continuously adjustable from 30 to 80 m/min.



Fig.: SP13V

Contents of package

› Material stop
› Bi-metal saw band



Optional accessories
Machine chassis MUG 1
(adaptation required)

› Stable, space-saving, folding, easy to transport
› Dimensions L x W x H: 500 x 470 x 780 mm
Art. no. 3630000

Cutting areas

				
SP 11V	0 °	Ø 105 mm	100 mm	100 x 100 mm
SP 13V		Ø 125 mm	125 mm	125 x 125 mm
SP 11V	45°	Ø 65 mm	60 mm	60 x 65 mm
SP 13V		Ø 85 mm	85 mm	85 x 85 mm
SP 13V	60°	Ø 45 mm	45 mm	45 x 50 mm

The cutting area was determined for aluminium. It can vary when using different materials and may be smaller (not cutting capacity).

Model	SP 11V	SP 13V
Article no.	3300070	3300075
Electrical connection	230 V/1 Ph ~50 Hz	230 V/1 Ph ~50 Hz
Motor output	850 W	1 kW
Saw band speed	30 - 80 m/min	30 - 80 m/min
Saw band dimensions	1 335 x 13 x 0.65 mm	1 440 x 13 x 0.65 mm
Cutting angle	0° - 45°	0° - 60°
Length	650 mm	720 mm
Width without/with material stop	290 / 670 mm	300 / 650 mm
Height bottom/top limit position	450 / 630 mm	420 / 680 mm
Net weight	19 kg	19.5 kg

Saw bands HSS bi-metal M 42

	Teeth per inch	Tooth angle	Article no.
SP 11V	**6 - 10 tpi**	0°	3351542
	10 - 14 tpi	0°	3351543
SP 13V	**6 - 10 tpi**	0°	3351546
	10 - 14 tpi	0°	3351547

„General saw band information“ on page 261

Important information on „Operation of machines with frequency converters“ on page 323
The metal-cutting bandsaw (frequency converter) complies with the DIN EN 55011 standard: class C2

Light and handy metal-cutting band saw. Ideal for universal deployment on construction sites, on jobs, in customer service vehicles, workshops, hobby workshops and in agriculture

TRADES

GEARBOX

Facts that impress in terms of quality, performance and price

- Quick clamping vice for fast workpiece clamping
- Saw head swivels from 0° to 45° to allow angled sawing
- Easily legible scale for adjusting the angle
- Microswitch for automatic limit position cut-off
- Automatic lowering of the saw head via three-stage adjustable saw head lowering pressure
- Equipped as a factory standard with bi-metal saw blade
- Large, practical handle and light weight allow for trouble-free transport to the construction site
- Adjustable material stop for batch work
- Fully equipped; the user can immediately start productive work after commissioning
- Transportation lock

Automatic limit switch cut-off

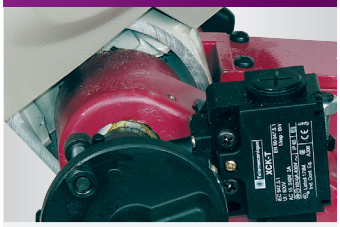

› Switches the saw band off at the bottom stop

Saw band guide



› Ball-bearing borne 3-point guide

Transport

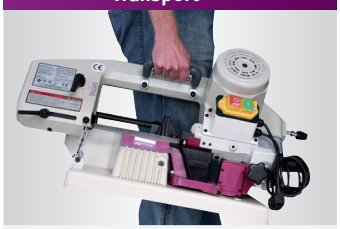

› Large, convenient handle and light weight allow for trouble-free transport to the construction site





Optional accessories
Machine chassis MUG 1
Stable, space-saving, folding, easy to transport
› Dimensions L x W x H: 500 x 470 x 780 mm
Art. no. 3630000

Contents of package

- › Material stop
- › Operating tool
- › Bi-metal saw band

Cutting areas

0 °	Ø 100 mm	100 mm	100 x 150 mm
45°	Ø 65 mm	60 mm	100 x 60 mm

The cutting area was determined for aluminium. It can vary when using different materials and may be smaller (not cutting capacity).

Model	S 100G
Article no.	3300100
Electrical connection	230 V/1 Ph ~50 Hz
Motor output	370 W
Saw band speed	45 m/min
Saw band dimensions	1 470 x 13 x 0.65 mm
Cutting angle	0° to 45°
Length of vice open / closed	950 / 850 mm
Width without/with material stop	300 / 660 mm
Height bottom/top limit position	680 / 820 mm
Net weight	23 kg

Saw bands HSS bi-metal M 42		
Teeth per inch	Tooth angle	Article no.
6 tpi	10°	3351109
10 - 14 tpi	0°	3351110
Saw band set HSS bi-metal M 42		
1 unit saw band 6 tpi; 10° 2 units saw band 10 - 14 tpi; 0°		3351100

„General saw band information“ on page 261

Metal-cutting band saw ideal for light sawing work.

Mitre cutting from -45° to 60° via pivoting saw head

TRADES

BELT

Facts that impress in terms of quality, performance and price

- Circuit breaker for belt cover and saw band cover, low-voltage version
- Separate emergency stop push button
- Low-voltage electronics 24 V
- Low-noise running action
- Three gears for a wide choice of materials
- Microswitch for automatic limit position cut-off
- Easily legible scale for adjusting the angle
- Equipped as a factory standard with bi-metal saw blade
- Saw band tensioning at front, adjustable via handwheel
- Adjustable material stop for batch work
- Quick clamping vice for fast workpiece clamping



Mitre square



› Grey cast iron
› Cutting angle easily adjustable from -45° to +60° using scale

Hydraulic cylinder:

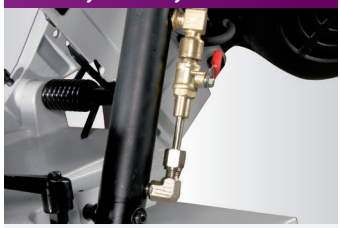

› Precise, continuously adjustable lowering via hydraulic cylinder and choke valve

Saw band guide



› Ball-bearing borne

Contents of package

› Material stop
› Bi-metal saw band
› Machine mobile base

Cutting areas

		
0 °	Ø 128 mm	100 x 145 mm
45°	Ø 90 mm	85 x 70 mm
60°	Ø 45 mm	55 x 45 mm
-45°	Ø 90 mm	85 x 70 mm

The cutting area was determined for aluminium. It can vary when using different materials and may be smaller (not cutting capacity).

Model	S 131GH
Article no.	3300131
Electrical connection	230 V/1 Ph ~50 Hz
Motor output	1.1 kW
Lifting the saw head	manual
Feed	continuously variable
Saw band speed	22 / 31 / 55 m/min
Saw band dimensions	1 638 x 13 x 0.65 mm
Cutting angle	-45° to 60°
Dimensions L x W x H	1 085 x 498 x 978 mm
Net weight	78 kg

Saw bands HSS bi-metal M 42		
Teeth per inch	Tooth angle	Article no.
6 tpi	10°	3351511
6 - 10 tpi	0°	3351512
8 - 12 tpi	0°	3351517
10 - 14 tpi	0°	3351518
Saw band set HSS bi-metal M 42		
1 unit saw band 6 tpi; 10° 1 unit saw band 6 - 10 tpi; 0° 1 unit saw band 10 - 14 tpi; 0°		3351500

„General saw band information“ on page 261

Band saw for metal working with mitre-pivoting saw head and continuously adjustable saw band speed

TRADES VARIO GEARBOX

Facts that impress in terms of quality, performance and price

- Low-noise running action
- Grey cast base plate and saw head
- Stable saw frame for smooth, low-vibration action
- Easily legible scale for adjusting the angle
- Equipped as a factory standard with bi-metal saw blade
- Saw band tensioning at front, adjustable via handwheel
- Adjustable material stop for batch work
- Fast workpiece clamping thanks to quick clamping vice
- Fully equipped; the user can immediately start productive work after commissioning

Pushbutton
Manual saw band run
› Switches the saw band run on and off



Control unit



› Generously dimensioned
› Coolant pump switch
› Potentiometer

Vario drive



› Continuously variable saw band speed

Saw band guide

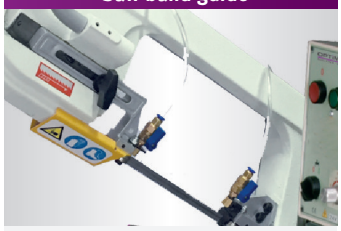

› Ball-bearing borne

Contents of package

› Material stop
› Bi-metal saw band
› Machine mobile base
› Coolant system

Cutting areas

0 °	Ø 150 mm	160 mm	150 x 160 mm
45°	Ø 105 mm	105 mm	105 x 130 mm
60°	Ø 65 mm	65 mm	65 x 65 mm

The cutting area was determined for aluminium. It can vary when using different materials and may be smaller (not cutting capacity).

Model	S 150G Vario
Article no.	3300150
Electrical connection	230 V/1 Ph ~50 Hz
Motor output	1.1 kW
Coolant pump motor	50 W
Lifting the saw head	manual
Feed	manual
Saw band speed	20 - 65 m/min
Number of speeds	Continuously variable
Saw band dimensions	1 735 x 12.7 x 0.9 mm
Cutting angle	0° to 60°
Length of vice open / closed	1 120 / 930 mm
Width without/with material stop	510 / 720 mm
Height of saw head bottom/top limit position	1 240 / 1 590 mm
Net weight	100 kg

AQUACUT C1	3530030
› For cooling the cut, 10 litres	

Saw bands HSS bi-metal M 42

Teeth per inch	Tooth angle	Article no.
6 tpi	10°	3351521
6 - 10 tpi	0°	3351522
10 - 14 tpi	0°	3351538

Saw band set HSS bi-metal M 42

1 unit saw band 6 tpi; 10° 1 unit saw band 6 - 10 tpi; 0° 1 unit saw band 10 - 14 tpi; 0°	3351501

„General saw band information“ on page 261

Important information on „Operation of machines with frequency converters“ on page 323
The metal-cutting bandsaw (frequency converter) complies with the DIN EN 55011 standard: class C3

The metal-cutting band saw for challenging sawing tasks.

With V-belt and 4 saw band speeds

TRADES

BELT

Facts that impress in terms of quality, performance and price

- Low-noise running action
- Rugged cast design
- Saw head lowering via hydraulic cylinder continuously adjustable by throttle valve
- Microswitch for automatic limit position cut-off
- Easily legible scale for adjusting the angle
- Equipped as a factory standard with bi-metal saw blade
- Saw band tensioning at front, adjustable via handwheel
- Ball-bearing borne saw band guide
- Rugged machine mobile base with large wheels and practical transport bar allows trouble-free relocation of the machine
- Adjustable material stop for batch work
- Circuit breaker for belt cover
- Fully equipped; the user can immediately start productive work after commissioning

Belt



› Four speeds adjustable by shifting the belt

Quick clamping vice

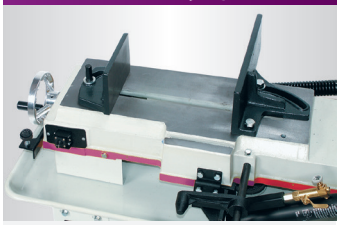

› Clamping jaws adjustable from 0° to 45° for mitre cuts

Coolant tank



› Integrated in chassis
› Tank capacity 11 litres



Contents of package

› Material stop
› Bi-metal saw band
› Machine mobile base

Model	S 181
Article no.	3300181
Electrical connection	400 V/3 Ph ~50 Hz
Motor output	750 W
Coolant pump motor	90 W
Lifting the saw head	manual
Feed	continuously variable
Saw band speed	21 / 33.5 / 45 / 50 m/min
Saw band dimensions	2 362 x 19 x 0.9 mm
Cutting angle	0° to 45°
Length	1 295 mm
Width without/with material stop	450 / 600 mm
Height of saw head bottom/top limit position	1 060 / 1 550 mm
Net weight	130 kg

Cutting areas

			
0 °	Ø 180 mm	180 mm	180 x 240 mm 50 x 300 mm
45°	Ø 110 mm	150 mm	110 x 170 mm

The cutting area was determined for aluminium. It can vary when using different materials and may be smaller (not cutting capacity).

Saw bands HSS bi-metal M 42		
Teeth per inch	Tooth angle	Article no.
5 - 8 tpi	**0°**	3357522
5 - 8 tpi	**6°**	3357516
6 - 10 tpi	**0°**	3357521
10 - 14 tpi	**0°**	3357520
Saw band set HSS bi-metal M 42		
1 unit saw band 6 - 10 tpi; 0° 1 unit saw band 5 - 8 tpi; 0° 1 unit saw band 5 - 8 tpi; 6°		3357500

„General saw band information“ on page 261

The metal-cutting band saw for challenging sawing tasks.

With gearbox and 3 saw band speeds

Facts that impress in terms of quality, performance and price

- Low-noise running action
- Rugged cast design
- Saw head lowering via hydraulic cylinder continuously adjustable by throttle valve
- Microswitch for automatic limit position cut-off
- Easily legible scale for adjusting the angle
- Equipped as a factory standard with bi-metal saw blade
- Ball-bearing borne saw band guide
- Rugged machine mobile base with large wheels and practical transport bar allows trouble-free relocation of the machine
- Saw band tensioning at front, adjustable via handwheel
- Adjustable material stop for batch work
- Fully equipped; the user can immediately start productive work after commissioning



Gearbox



› Three speeds
› Switchable via gearbox

Quick clamping vice



› Clamping jaws adjustable from 0° to 45° for mitre cuts

Coolant tank



› Integrated in chassis
› Tank capacity 11 litres

Contents of package

› Material stop
› Bi-metal saw band
› Machine mobile base

Cutting areas

0 °	Ø 180 mm	180 mm	180 x 240 mm 65 x 300 mm
45°	Ø 110 mm	150 mm	110 x 170 mm

The cutting area was determined for aluminium. It can vary when using different materials and may be smaller (not cutting capacity).

Model	S 181G
Article no.	3300182
Electrical connection	400 V/3 Ph ~50 Hz
Motor output	750 W
Coolant pump motor	90 W
Lifting the saw head	manual
Feed	continuously variable
Saw band speed	45 / 67 / 77 m/min
Saw band dimensions	2 362 x 19 x 0.9 mm
Cutting angle	0° to 45°
Length	1 200 mm
Width without/with material stop	450 / 600 mm
Height of saw head bottom / top limit position	1,060 / 1,550 mm
Net weight	130 kg

AQUACUT C1	3530030
› For cooling the cut, 10 litres	

Saw bands HSS bi-metal M 42		
Teeth per inch	Tooth angle	Article no.
5 - 8 tpi	0°	3357522
5 - 8 tpi	6°	3357516
6 - 10 tpi	0°	3357521
10 - 14 tpi	0°	3357520
Saw band set HSS bi-metal M 42		
1 unit saw band 6 - 10 tpi; 0° 1 unit saw band 5 - 8 tpi; 0° 1 unit saw band 5 - 8 tpi; 6°		3357500

„General saw band information“ on page 261

The metal-cutting gear band saw for challenging sawing tasks

TRADES

GEARBOX

Facts that impress in terms of quality, performance and price

- Low-noise running action
- Rugged cast design
- Saw head lowering via hydraulic cylinder continuously adjustable by throttle valve
- Microswitch for automatic limit position cut-off
- Easily legible scale for adjusting the angle
- Equipped as a factory standard with bi-metal saw blade
- Saw band tensioning at front, adjustable via handwheel
- Ball-bearing borne saw band guide
- Rugged machine mobile base with large wheels and practical transport bar allows trouble-free relocation of the machine
- Adjustable material stop for batch work
- Easy-to-clean coolant parts
- Polished workpiece mounting surface
- Circuit breaker for belt cover
- Fully equipped; the user can immediately start productive work after commissioning

Saw band guide



› Ball-bearing borne; for an excellent band run and thus optimal cutting

Coolant tank



› Integrated in chassis
› Tank capacity 11 litres

Gearbox



› Powerful
› two-speed



Contents of package

› Material stop
› Bi-metal saw band
› Machine mobile base

Cutting areas

0 °	Ø 180 mm	180 mm	180 x 240 mm 50 x 300 mm
45°	Ø 110 mm	150 mm	110 x 170 mm

The cutting area was determined for aluminium. It can vary when using different materials and may be smaller (not cutting capacity).

Model	SD 200G
Article no.	3300200
Electrical connection	400 V/3 Ph ~50 Hz
Motor output	550 W / 750 W
Coolant pump motor	100 W
Lifting the saw head	manual
Feed	continuously variable
Saw band speed	44 / 88 m/min
Saw band dimensions	2 360 x 19 x 0.9 mm
Cutting angle	0° to 45°
Length	1 295 mm
Width without material stop	535 mm
Height bottom/top limit position	790 mm / 1 200 mm
Net weight	130 kg

AQUACUT C1	3530030
› For cooling the cut, 10 litres	

Saw bands HSS bi-metal M 42		
Teeth per inch	Tooth angle	Article no.
5 - 8 tpi	**0°**	3357522
5 - 8 tpi	**6°**	3357516
6 - 10 tpi	**0°**	3357521
10 - 14 tpi	**0°**	3357520
Saw band set HSS bi-metal M 42		
with 1 unit each saw band 6 - 10 TPI; 0° / 5 - 8 TPI; 0° / 5 - 8 TPI; 6°		3357500

„General saw band information“ on page 261

Metal-cutting band saw with pivoting saw head
and two saw band speeds

TRADES

GEARBOX

Facts that impress in terms of quality, performance and price

- Low-noise running action
- Rugged cast design
- Excellent cutting precision thanks to vibration-free action
- Two switchable speeds
- Saw head lowering via hydraulic cylinder continuously adjustable by throttle valve
- Microswitch for automatic limit position cut-off
- Easily legible scale for adjusting the angle
- Coolant system
- Rugged machine mobile base
- Ball-bearing borne saw band guide
- Equipped as a factory standard with bi-metal saw blade
- Adjustable material stop for batch work
- Fully equipped; the user can immediately start productive work after commissioning



Panel



› Clear-cut and easy to use
› Speed selection switch
› Coolant pump

Quick clamping vice



› Adjustable via hand wheel
› Workpiece is clamped using a handy quick-clamping lever

Contents of package

› Material stop
› Bi-metal saw band
› Machine mobile base
› Coolant pump

Cutting areas

0 °	Ø 170 mm	140 mm	140 x 190 mm
45°	Ø 125 mm	125 mm	95 x 140 mm

The cutting area was determined for aluminium. It can vary when using different materials and may be smaller (not cutting capacity).

Model	S 210G
Article no.	3300210
Electrical connection	400 V/3 Ph ~50 Hz
Motor output	750 W
Coolant pump motor	90 W
Lifting the saw head	manual
Feed	continuously variable
Saw band speed	40 / 80 m/min
Saw band dimensions	2 080 x 20 x 0.9 mm
Cutting angle	0° to 45°
Length of closed/open vise	1 200 / 1 310 mm
Width without/with material stop	685 / 985 mm
Height bottom/top limit position	1 320 / 1 550 mm
Net weight	152 kg

AQUACUT C1	3530030
› For cooling the cut, 10 litres	

Saw bands HSS bi-metal M 42		
Teeth per inch	Tooth angle	Article no.
5 - 8 tpi	0°	3357503
5 - 8 tpi	6°	3357505
6 - 10 tpi	0°	3357514
10 - 14 tpi	0°	3357515
Saw band set HSS bi-metal M 42		
1 unit saw band 6 - 10 tpi; 0° 1 unit saw band 5 - 8 tpi; 0° 1 unit saw band 5 - 8 tpi; 6°		3357502

„General saw band information“ on page 261

Metal-cutting band saw with pivoting saw head.

S 275NV with continuously variable saw band speed

TRADES VARIO GEARBOX

Facts that impress in terms of quality, performance and price

- Low-noise running action
- Rugged cast design
- Excellent cutting precision thanks to vibration-free action
- Saw head lowering via hydraulic cylinder continuously adjustable by throttle valve
- Microswitch for automatic limit position cut-off
- Coolant system
- Equipped as a factory standard with bi-metal saw blade
- Adjustable material stop for batch work
- Rugged machine mobile base
- Ball-bearing borne saw band guide
- Easily legible scale for adjusting the angle
- Overload protection

S 275N

- Motor protection switch
- Two switchable speeds

S 275NV

- Saw band speed continuously adjustable from 20 to 90 m/min.
- Speed change possible during operation

Saw band tension



› Easy and accurate adjustment of the saw band tension by pressure gauge



Fig.: S 275N

Quick clamping vice



› Adjustable via hand wheel.
› Workpiece is clamped using a handy quick-clamping lever

Contents of package

› Material stop
› Bi-metal saw band
› Machine mobile base
› Coolant pump

Cutting areas

			
0 °	Ø 225 mm	170 mm	150 x 245 mm
45°	Ø 145 mm	145 mm	145 x 180 mm
60°	Ø 90 mm	90 mm	90 x 120 mm

The cutting area was determined for aluminium. It can vary when using different materials and may be smaller (not cutting capacity).

Model	S 275N	S 275NV
Article no.	3300260	3300265
Electrical connection	400 V/3 Ph ~50 Hz	230 V/1 Ph ~50 Hz
Motor output	1.1 kW	1.5 kW
Coolant pump motor	90 W	
Lifting the saw head	manual	
Feed	continuously variable	
Saw band speed	45 / 90 m/min	20 - 90 m/min
Saw band dimensions	2 480 x 27 x 0.9 mm	
Cutting angle	0° to 60°	
Length	1 400 mm	
Width without/with material stop	685 / 985 mm	
Height bottom/top limit position	1 235 / 1 700 mm	
Net weight	185 kg	

AQUACUT C1	3530030
› For cooling the cut, 10 litres	

Saw bands HSS bi-metal M 42		
Teeth per inch	Tooth angle	Article no.
5 - 8 tpi	0°	3357511
5 - 8 tpi	6°	3357512
6 - 10 tpi	0°	3357524
6 - 10 tpi	6°	3357510
10 - 14 tpi	0°	3357525
Saw band set HSS bi-metal M 42		
1 unit saw band 6 - 10 tpi; 0° 1 unit saw band 5 - 8 tpi; 0° 1 unit saw band 5 - 8 tpi; 6°		3357504

„General saw band information“ on page 261

Important information on „Operation of machines with frequency converters“ on page 323
The metal-cutting bandsaw (frequency converter) complies with the DIN EN 55011:2011-04 standard: class C3

Metal-cutting band saw with SIEMENS Sinamics inverter for continuously variable saw band speed

TRADES VARIO GEARBOX

Facts that impress in terms of quality, performance and price

- Low-noise running action
- Rugged cast design
- Excellent cutting precision thanks to vibration-free action
- Variable cutting speeds
- Saw head lowering via hydraulic cylinder continuously adjustable by throttle valve
- Powerful 100 Watt coolant system
- Carbide saw band guide
- Microswitch for automatic limit position cut-off
- Clear-cut control panel for easy use
- Ball-bearing borne saw band guide
- Quick clamping vice, adjustable via hand wheel. Workpiece is clamped using a handy quick-clamping lever
- Easily legible scale for adjusting the angle
- Equipped as a factory standard with bi-metal saw blade
- 2-channel safety chain with quick stop in case of emergency stop
- Adjustable material stop for batch work



Inverter



› SIEMENS Sinamics G110M
› A technically unique solution exclusively for OPTIMUM

Saw band tension



› Easy and accurate adjustment of the saw band tension by pressure gauge

Coolant pump



› Powerful
› Motor 100 W

Contents of package

› Material stop
› Bi-metal saw band
› Machine mobile base
› Coolant pump

Model	SD 281V
Article no.	3290250
Electrical connection	400 V/3 Ph ~50 Hz
Motor output	1.5 kW
Coolant pump motor	100 W
Lifting the saw head	manual
Feed	continuously variable
Saw band speed	15 - 100 m/min
Saw band dimensions	2 480 x 27 x 0.9 mm
Cutting angle	0° to 60°
Length	1 400 / 1 700 mm
Width without/with material stop	685 / 985 mm
Height bottom/top limit position	1 300 / 1 700 mm
Net weight	185 kg

Important information on „Operation of machines with frequency converters“ on page 323
The metal-cutting bandsaw (frequency converter) complies with the DIN EN 55011 standard: class C2

AQUACUT C1	3530030
› For cooling the cut, 10 litres	

Saw bands HSS bi-metal M 42		
Teeth per inch	Tooth angle	Article no.
5 - 8 tpi	0°	3357511
5 - 8 tpi	6°	3357512
6 - 10 tpi	0°	3357524
6 - 10 tpi	6°	3357510
10 - 14 tpi	0°	3357525
Saw band set HSS bi-metal M 42		
1 unit saw band 6 - 10 tpi; 0° 1 unit saw band 5 - 8 tpi; 0° 1 unit saw band 5 - 8 tpi; 6°		3357504

„General saw band information“ on page 261

Metal-cutting band saw with pivoting saw head for economic and precise work

TRADES | DOUBLE MITRE | GEARBOX

Facts that impress in terms of quality, performance and price

- Low-noise running action
- Heavy cast design
- Excellent cutting precision thanks to vibration-free action
- Ball-bearing borne saw band guide
- Chip brush
- Automatic saw switch-off after completing the cut
- Rugged machine chassis
- Generously dimensioned control unit
- Equipped as a factory standard with bi-metal saw blade
- Material stop with scaling
- Quick clamping vice, adjustable via hand wheel. Workpiece is clamped using a handy quick-clamping lever
- End stops adjustable to degree accuracy
- Roller support for supporting long materials
- Fully equipped; the user can immediately start productive work after commissioning



Saw band tension



› Easy and accurate adjustment of the saw band tension by pressure gauge

Coolant pump



› Powerful
› 100 W

Contents of package

› Material stop
› Bi-metal saw band
› Machine mobile base
› Coolant pump

Cutting areas

0 °	Ø 225 mm	180 mm	150 x 245 mm
45°	Ø 150 mm	150 mm	150 x 190 mm
60°	Ø 90 mm	90 mm	90 x 180 mm
-45°	Ø 150 mm	150 mm	120 x 150 mm

The cutting area was determined for aluminium. It can vary when using different materials and may be smaller (not cutting capacity).

Model	S 285DG
Article no.	3300285
Electrical connection	400 V/3 Ph ~50 Hz
Motor output	1.1 kW
Coolant pump motor	100 W
Lifting the saw head	manual
Feed	hydraulic via lowering cylinder
Saw band speed	45 / 90 m/min
Saw band dimensions	2 480 x 27 x 0.9 mm
Cutting angle	-45° to 60°
Length	1 720 mm
Width without/with material stop	870 / 1 270 mm
Height bottom / top limit position	1 280 / 1 800 mm
Net weight	295 kg

AQUACUT C1	3530030
› For cooling the cut, 10 litres	

Saw bands HSS bi-metal M 42

Teeth per inch	Tooth angle	Article no.
5 - 8 tpi	0°	3357511
5 - 8 tpi	6°	3357512
6 - 10 tpi	0°	3357524
10 - 14 tpi	0°	3357525
Saw band set HSS bi-metal M 42 1 unit saw band 6 - 10 tpi; 0° 1 unit saw band 5 - 8 tpi; 0° 1 unit saw band 5 - 8 tpi; 6°		3357504

„General saw band information“ on page 261

Band saw for metal working with pivoting saw head.

TRADES | DOUBLE MITRE | GEARBOX

Facts that impress in terms of quality, performance and price

- Low-noise running action
- Heavy cast design
- Excellent cutting precision thanks to vibration-free action
- Ball-bearing borne saw band guide
- Chip brush
- Microswitch for automatic limit position cut-off
- Pushbutton - manual saw band run - on the lever switches the saw band run on and off
- Equipped as a factory standard with bi-metal saw blade
- Material stop with scaling
- Quick clamping vice, adjustable via hand wheel. Workpiece is clamped using a handy quick-clamping lever
- Rugged machine chassis
- End stops adjustable to degree accuracy



Roller support



› For supporting long materials

Saw band tension



› Easy and accurate adjustment of the saw band tension by pressure gauge

Contents of package
› Material stop
› Bi-metal saw band
› Machine mobile base
› Coolant pump

Cutting areas

0 °	Ø 255 mm	190 mm	190 x 310 mm
45°	Ø 215 mm	190 mm	190 x 200 mm
-60°	Ø 135 mm	135 mm	135 x 135 mm
-45°	Ø 220 mm	190 mm	135 x 190 mm

The cutting area was determined for aluminium. It can vary when using different materials and may be smaller (not cutting capacity).

Model	SD 300DG
Article no.	3290290
Technical data	
Electrical connection	400 V / 3 Ph ~50 Hz
Motor output	1.5 kW
Coolant pump motor	100 W
General Information	
Lifting the saw head	manual
Feed	continuously variable
Saw band speed	35/70 m/min.
Saw band dimensions	2 750 x 27 x 0.9 mm
Cutting angle	45° to -60°
Dimensions	
Length	1 680 mm
Width without/with material stop	700 / 1 300 mm
Height bottom/top limit position	1 600 / 1 850 mm
Weight	335 kg

AQUACUT C1	3530030
› For cooling the cut, 10 litres	

Saw bands HSS bi-metal M 42		
Teeth per inch	Tooth angle	Article no.
5 - 8 tpi	0°	3357751
5 - 8 tpi	10°	3357752
6 - 10 tpi	0°	3357753
10 - 14 tpi	0°	3357754
Saw band set HSS bi-metal M 42 1 unit saw band 6 - 10 tpi; 0° 1 unit saw band 5 - 8 tpi; 0° 1 unit saw band 5 - 8 tpi; 10°		3357700

„General saw band information“ on page 261

Band saw for metalworking with SIEMENS inverter Vario drive
for continuously adjustable saw band speed

INDUSTRY | DOUBLE MITRE | VARIO | GEARBOX

Facts that impress in terms of quality, performance and price

- Low-noise running action
- Heavy cast design
- Excellent cutting precision thanks to vibration-free action
- Ball-bearing borne saw band guide
- EMC class C2
- Two-channel safety chain with quick stop for emergency stop
- Chip brush
- Pushbutton - manual saw band run - on the lever switches the saw band run on and off
- Powerful 100 Watt coolant system
- Microswitch for automatic limit position cut-off
- Equipped as a factory standard with bi-metal saw blade
- Material stop with scaling
- Quick clamping vice, adjustable via hand wheel. Workpiece is clamped using a handy quick-clamping lever
- Rugged machine chassis
- End stops adjustable to degree accuracy
- Saw band speed continuously adjustable from 15 to 90 m/min.



Saw band tension



› Easy and accurate adjustment of the saw band tension by pressure gauge

Roller support



› For supporting long materials

Inverter

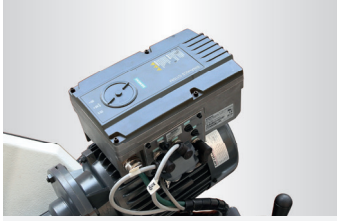

› SIEMENS Sinamics G110M
› A technically unique solution exclusively for OPTIMUM

Contents of package

› Material stop
› Bi-metal saw band
› Machine mobile base
› Coolant pump

Cutting areas

			
0°	Ø 255 mm	190 mm	190 x 310 mm
-45°	Ø 220 mm	190 mm	135 x 190 mm
-60°	Ø 135 mm	135 mm	135 x 135 mm
45°	Ø 215 mm	190 mm	190 x 200 mm

The cutting area was determined for aluminium. It can vary when using different materials and may be smaller (not cutting capacity).

Model	SD 300V
Article no.	3290310
Electrical connection	400 V/3 Ph ~50 Hz
Motor output	1.5 kW
Coolant pump motor	100 W
Lifting the saw head	manual
Feed	hydraulic via lowering cylinder
Saw band speed	15 - 90 m/min
Saw band dimensions	2 750 x 27 x 0.9 mm
Cutting angle	45° to -60°
Length	1 680 mm
Width without/with material stop	700 / 1 330 mm
Height bottom/top limit position	1 600 / 1 850 mm
Net weight	335 kg

AQUACUT C1	3530030
› For cooling the cut, 10 litres	

Saw bands HSS bi-metal M 42

Teeth per inch	Tooth angle	Article no.
5 - 8 tpi	0°	3357751
5 - 8 tpi	10°	3357752
6 - 10 tpi	0°	3357753
10 - 14 tpi	0°	3357754
Saw band set HSS bi-metal M 42 1 unit saw band 6 - 10 tpi; 0° 1 unit saw band 5 - 8 tpi; 0° 1 unit saw band 5 - 8 tpi; 10°		3357700

„General saw band information“ on page 261

Important information on transport surcharge and „Operation of machines with frequency converters“ on page 323
The metal-cutting bandsaw (frequency converter) complies with the DIN EN 55011 standard: class C2

Metal-cutting band saw with turntable and SIEMENS inverter drive for continuously variable saw band speed

INDUSTRY | TURN TABLE | DOUBLE MITRE | VARIO | GEARBOX

Facts that impress in terms of quality, performance and price

- Low-noise running action
- Heavy cast design
- Carbide guide
- Excellent cutting precision thanks to vibration-free action
- EMC class C2
- Two-channel safety chain with quick stop for emergency stop
- Saw band speed continuously adjustable via frequency inverter
- Professional inverter technology
- High motor output even at low speeds
- Microswitch for automatic limit position cut-off
- Precise, re-adjustable and durable saw band guide
- End stops adjustable to degree accuracy
- Chip brush
- Powerful 100 Watt coolant system
- Quick clamping vice, adjustable via hand wheel. Workpiece is clamped using a handy quick-clamping lever
- Rugged machine chassis
- Control unit facilitates machine setup
- Fully equipped; the user can immediately start productive work after commissioning

Saw band tension

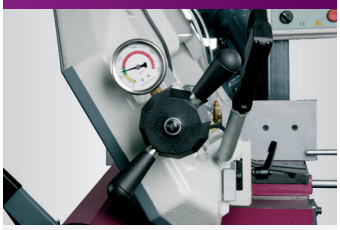

› Easy and accurate adjustment of the saw band tension by pressure gauge

Turntable

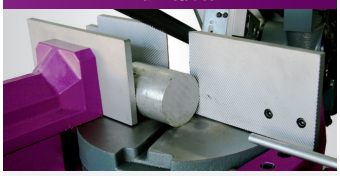

› Any angle between 45° and -60° can be sawed as the cutting gap pivots with the saw arm
› Easily legible angle scale

Inverter



› SIEMENS Sinamics G110M
› A technically unique solution exclusively for OPTIMUM



Contents of package

› Material stop
› Bi-metal saw band
› Machine mobile base
› Coolant pump

Cutting areas

0°	Ø 255 mm	255 mm	200 x 270 mm
-45°	Ø 190 mm	140 mm	140 x 210 mm
-60°	Ø 110 mm	110 mm	110 x 210 mm
45°	Ø 190 mm	160 mm	160 x 160 mm

The cutting area was determined for aluminium. It can vary when using different materials and may be smaller (not cutting capacity).

Model	SD 310V
Article no.	3290340
Electrical connection	400 V/3 Ph ~50 Hz
Motor output	1.5 kW
Coolant pump motor	100 W
Lifting the saw head	manual
Feed	hydraulic via lowering cylinder
Saw band speed	15 - 100 m/min
Saw band dimensions	2 750 x 27 x 0.9 mm
Cutting angle	45° to -60°
Length	1,850 mm
Width without/with material stop	700 / 1 300 mm
Height bottom/top limit position	1 600 / 2 000 mm
Net weight	380 kg

AQUACUT C1	3530030
› For cooling the cut, 10 litres	

Saw bands HSS bi-metal M 42

Teeth per inch	Tooth angle	Article no.
5 - 8 tpi	0°	3357751
5 - 8 tpi	10°	3357752
6 - 10 tpi	0°	3357753
10 - 14 tpi	0°	3357754
Saw band set HSS bi-metal M 42 1 unit saw band 5 - 8 tpi; 0° 1 unit saw band 5 - 8 tpi; 10° 1 unit saw band 6 - 10 tpi; 0°		3357700

„General saw band information“ on page 261

Important information on „Operation of machines with frequency converters“ on page 323
The metal-cutting bandsaw (frequency converter) complies with the DIN EN 55011:2011-04 standard: class C2

Metal-cutting band saw with double mitre, heavy-duty design with a cutting capacity of up to 350 mm

INDUSTRY

DOUBLE MITRE

GEARBOX

Facts that impress in terms of quality, performance and price

- Heavy-duty industrial design
- Low-noise running action
- Excellent cutting precision thanks to vibration-free action
- Two switchable speeds 36/72 m/min.
- Mitre adjustment to -60° by pivoting the entire saw head
- Generously dimensioned, rugged quick clamping vise, adjustable via hand wheel Workpiece clamping with a practical quick-clamping lever, can be shifted for large materials
- Equipped as a factory standard with bi-metal saw blade
- End stops adjustable to degree accuracy
- Chip brush
- Combinable and individually adjustable carbide and ball bearing guides on the saw band
- Precise, continuously adjustable saw band movement via hydraulic cylinder
- Powerful 100 Watt coolant system
- Easy adjustment of the lowering speed via feed control valve in control panel
- Emergency stop button
- Rugged machine mobile base
- Microswitch for automatic limit position cut-off
- Roller support adjustable for long and heavy workpieces
- Fully equipped; the user can immediately start productive work after commissioning

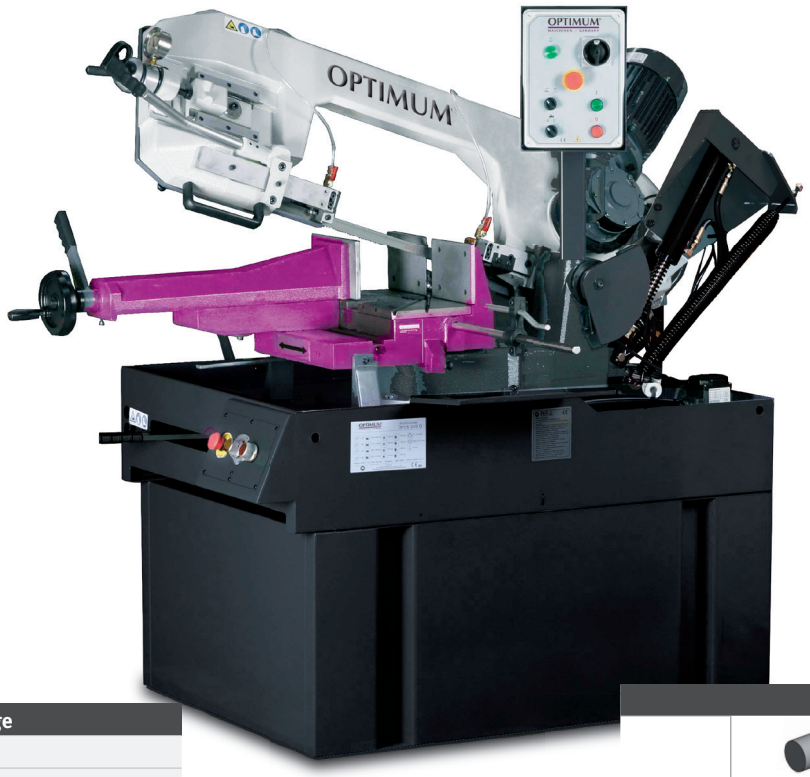

Roller support



› For supporting long materials

Saw band tension



› Easy and accurate adjustment of the saw band tension by pressure gauge

Contents of package

- › Material stop
- › Bi-metal saw band
- › Machine mobile base
- › Coolant pump

Model	S 350DG
Article no.	3290350
Electrical connection	400 V/3 Ph ~50 Hz
Total rated value	2.4 kW
Saw motor	2.2 kW
Coolant pump motor	50 W
Lifting the saw head	manual
Feed	hydraulic via lowering cylinder
Saw band speed	36/72 m/min.
Saw band dimensions	2 925 x 27 x 0.9 mm
Cutting angle	-45° to 60°
Length	1 750 mm
Width without/with material stop	1 075 / 1 415 mm
Height bottom/top limit position	1 420 / 2 000 mm
Net weight	550 kg

Cutting areas

			
0°	Ø 270 mm	230 mm	230 x 350 mm
45°	Ø 230 mm	200 mm	210 x 220 mm
60°	Ø 140 mm	140 mm	140 x 220 mm
-45°	Ø 230 mm	170 mm	140 x 200 mm

The cutting area was determined for aluminium. It can vary when using different materials and may be smaller (not cutting capacity).

Saw bands HSS bi-metal M 42

Teeth per inch	Tooth angle	Article no.
5 - 8 tpi	0°	3357541
4 - 6 tpi	6°	3357540
6 - 10 tpi	0°	3357542
10 - 14 tpi	0°	3357543
Saw band set 1 unit saw band 6 - 10 tpi; 0° 1 unit saw band 5 - 8 tpi; 0° 1 unit saw band 4 - 6 tpi; 6°		3357501

„General saw band information“ on page 261

Semi-automatic double mitre metal-cutting band saw with SIEMENS inverter drive Professional and rugged saw with a cutting capacity of up to 350 mm

INDUSTRY | DOUBLE MITRE | VARIO | GEARBOX

Facts that impress in terms of quality, performance and price

- Heavy-duty industrial design
- Low-noise running action
- Manual or semi-automatic operation
- Saw band speed continuously adjustable from 0 to 80 m/min.
- Excellent cutting precision thanks to vibration-free action
- Mitre adjustment to 60° by pivoting the entire saw head
- Equipped as a factory standard with bi-metal saw blade
- End stops adjustable to degree accuracy
- Chip brush
- Microswitch for automatic limit position cut-off
- Roller support adjustable for long and heavy workpieces
- Powerful 100 Watt coolant system
- Ball bearing borne saw band guide with carbide shims for optimal cutting results
- Easy adjustment of the lowering speed via feed control valve in control panel
- Generously dimensioned, hydraulic quick-action vice, self-closing, adjustable for large cross-sections
- Machine with full equipment set; the user can immediately start productive work
- 2-channel safety chain with quick stop in case of emergency stop
- EMC class C2

Function
Semi-automatic operation
- Vice closes and motor is activated
- Lower the saw head to cut
- Motor stops and saw head returns to original position

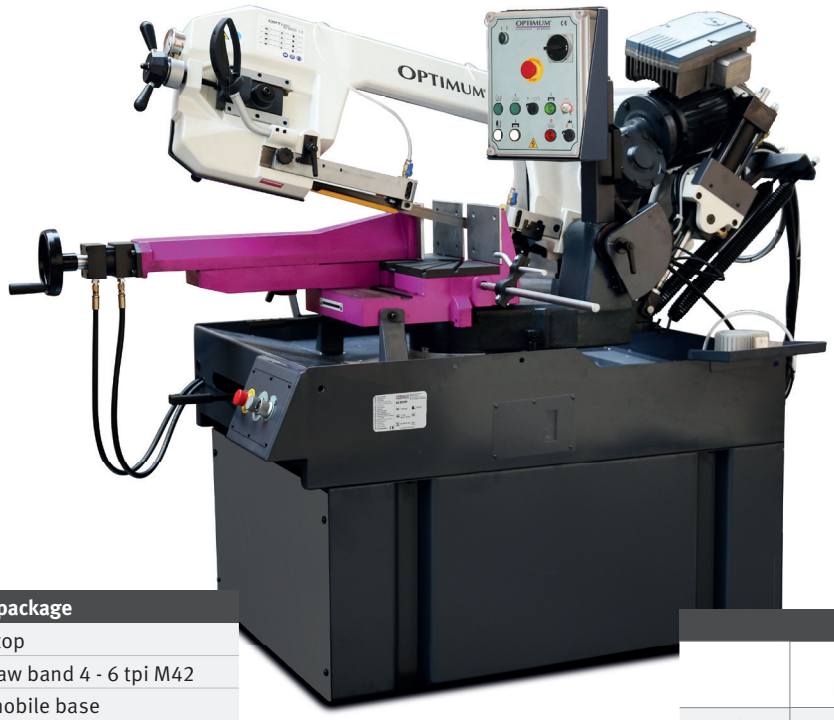

Inverter



› SIEMENS Sinamics G110M
› A technically unique solution exclusively for OPTIMUM

Saw band tension

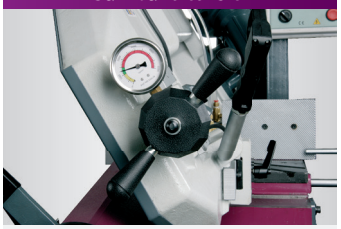

› Easy and accurate adjustment of the saw band tension by pressure gauge

Contents of package
- › Material stop
- › Bi-metal saw band 4 - 6 tpi M42
- › Machine mobile base
- › Coolant pump

Model	SD 351AV
Article no.	3290360
Electrical connection	400 V/3 Ph ~50 Hz
Total rated value	3.8 kW
Saw motor	2.2 kW
Coolant pump motor	50 W
Motor-hydraulic pump	1.4 kW
Lifting the saw head:	
Manual operation	Hydraulic via pushbutton
Semi-automatic operation	automatic
Saw band speed	15 - 100 m/min continuously variable
Saw band dimensions	2 925 x 27 x 0.9 mm
Cutting angle	-45° to 60°
Length x width x height min.	1,935 x 1,425 x 1,626 mm
Net weight	600 kg

Cutting areas

			
0°	Ø 270 mm	230 mm	230 x 350 mm
45°	Ø 230 mm	200 mm	210 x 220 mm
60°	Ø 140 mm	140 mm	140 x 220 mm
-45°	Ø 230 mm	170 mm	140 x 200 mm

The cutting area was determined for aluminium. It can vary when using different materials and may be smaller (not cutting capacity).

Saw bands HSS bi-metal M 42

Teeth per inch	Tooth angle	Article no.
5 - 8 tpi	0°	3357541
4 - 6 tpi	6°	3357540
6 - 10 tpi	0°	3357542
10 - 14 tpi	0°	3357543
Saw band set 1 unit saw band 6 - 10 tpi; 0° 1 unit saw band 5 - 8 tpi; 0° 1 unit saw band 4 - 6 tpi; 6°		3357501

„General saw band information“ on page 261

Important information on „Operation of machines with frequency converters“ on page 323
The metal-cutting bandsaw (frequency converter) complies with the DIN EN 55011:2011-04 standard: class C2

OPTIsaw® SD 500

NEW

Double mitre metal-cutting band saw with versatile deployment options in trades and industry

INDUSTRY

DOUBLE MITRE

GEARBOX

Facts that impress in terms of quality, performance and price

- Heavy-duty industrial design
- Low-noise running action
- Excellent cutting precision thanks to vibration-free action
- Mitre adjustment -45° to 60° by pivoting the entire saw head
- Equipped as a factory standard with bi-metal saw blade
- Microswitch for automatic limit position cut-off
- Powerful 100 Watt coolant system
- Ball bearing borne saw band guide with carbide shims for optimal cutting results
- Easy adjustment of the lowering speed via feed control valve in control panel
- Clear-cut control panel



Roller support



› For supporting long materials

Saw band tension



› Easy and accurate adjustment of the saw band tension by pressure gauge

Machine vice

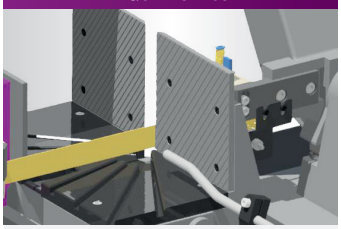

› Generously dimensioned quick clamping vise, laterally displaceable
› with cutting gap

Model	SD 500
Article no.	3292380
Technical data	
Electrical connection	400 V/3 Ph ~50 Hz
Total rated value	3.8 kW
Saw motor	2.2 kW
Coolant pump motor	100 W
General Information	
Lifting the saw head	manual
Feed	hydraulic via lowering cylinder
Saw band speed	35 / 70 m/min
Saw band dimensions	3 770 x 34 x 1.1 mm
Cutting angle	-45° to 60°
Dimensions and weight	
Length x width x height min.	2 122 x 1 046 x 1 497 mm
Net weight	552 kg

Cutting areas

0°	Ø 355 mm	280 mm	280 x 490 mm
45°	Ø 355 mm	280 mm	280 x 340 mm
60°	Ø 230 mm	180 mm	180 x 220 mm
-45°	Ø 290 mm	250 mm	250 x 250 mm

The cutting area was determined for aluminium. It can vary when using different materials and may be smaller (not cutting capacity).

Saw bands HSS bi-metal M 42

Teeth per inch	Tooth angle	Article no.
5 - 8 tpi	0°	3357590
6 - 10 tpi	0°	3357591

Contents of package

› Material stop
› Bi-metal saw band 4 - 6 tpi M42
› Machine mobile base
› Coolant pump

Please note: Restrictions apply for attaching material stand MSR

Semi-automatic double mitre metal-cutting band saw with SIEMENS inverter drive Versatile deployment options in trades and industry

INDUSTRY | DOUBLE MITRE | VARIO | GEARBOX

Facts that impress in terms of quality, performance and price

- Heavy-duty industrial design
- Low-noise running action
- Manual or semi-automatic operation
- Saw band speed continuously adjustable from 0 to 80 m/min.
- Excellent cutting precision thanks to vibration-free action
- Mitre adjustment -45° to 60° by pivoting the entire saw head
- Equipped as a factory standard with bi-metal saw blade
- Microswitch for automatic limit position cut-off
- Powerful 100 Watt coolant system
- Ball bearing borne saw band guide with carbide shims for optimal cutting results
- Easy adjustment of the lowering speed via feed control valve in control panel
- Generously dimensioned, hydraulic quick clamping vise, self-locking, laterally displaceable
- Pressure gauge for correct saw band tension
- Clear-cut control panel

Function
Semi-automatic operation
Vice closes and motor is activated
- Lower the saw head to cut
- Motor stops and saw head returns to original position



Contents of package
- › Material stop
- › Bi-metal saw band 4 - 6 tpi M42
- › Machine mobile base
- › Coolant pump

Roller support



› For supporting long materials

Inverter



› SIEMENS Sinamics G110M
› A technically unique solution exclusively for OPTIMUM

Saw band tension

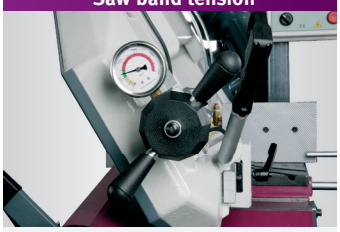

› Easy and accurate adjustment of the saw band tension by pressure gauge

Model	SD 500AV
Article no.	3292385
Electrical connection	400 V/3 Ph ~50 Hz
Total rated value	3.8 kW
Saw motor	2.2 kW
Coolant pump motor	100 W
Motor-hydraulic pump	1.4 kW
Lifting the saw head:	
Manual operation	Hydraulic via pushbutton
Semi-automatic operation	automatic
Saw band speed	20 - 80 m/min
Saw band dimensions	3 770 x 34 x 1.1 mm
Cutting angle	45° to -60°
Dimensions L x W x H min.	2,129 x 1,046 x 1,687 mm
Net weight	645 kg

Cutting areas

0°	Ø 355 mm	300 mm	300 x 490 mm
45°	Ø 350 mm	290 mm	290 x 340 mm
60°	Ø 230 mm	180 mm	180 x 220 mm
-45°	Ø 290 mm	250 mm	250 x 250 mm

The cutting area was determined for aluminium. It can vary when using different materials and may be smaller (not cutting capacity).

AQUACUT C1	3530030
› For cooling the cut, 10 litres	

Saw bands HSS bi-metal M 42

Teeth per inch	Tooth angle	Article no.
5 - 8 tpi	0°	3357590
6 - 10 tpi	0°	3357591

Important information on „Operation of machines with frequency converters“ on page 323
The metal-cutting bandsaw (frequency converter) complies with the DIN EN 55011:2011-04 standard: class C2

TRADES

Manual metal-cutting circular saws for steel, iron, light alloys, solid materials and sections

Facts that impress in terms of quality, performance and price

- Pivot range of ±45° on both sides
- Easily readable angle scale supports precise work
- Mitre adjustment within seconds
- Protected vice spindle
- Solid machine chassis with drill holes on both sides for attaching the MSR material stand
- Long handle supports sawing without applying excessive force, includes integrated pushbutton (on/off)
- Automatic coolant pump switch-on during sawing
- Functional protection device, closed design, mobile
- Fast opening mechanism for optimal safety during cutting
- Centrically clamping vise, 4x guided with individually adjustable clamping jaws Cut always occurs in optimal position relative to workpiece
- Solid machine chassis
- Protected vice spindle
- Machine chassis sizes:
  - CS 275 - 460 x 515 x 775 mm and
  - CS 315 - 546 x 620 x 801 mm
- The saw is delivered without a circular saw blade (saw blade division freely selectable)



Fig.: CS 315

	Cutting areas			
				
CS 275	0 °	Ø 60 mm	60 mm	60 x 100 mm
CS 315		Ø 85 mm	85 mm	70 x 130 mm
CS 275	45°	Ø 60 mm	60 mm	60 x 70 mm
CS 315		Ø 85 mm	85 mm	70 x 90 mm

Contents of package
› Coolant system
› Machine mobile base

Model	CS 275	CS 315
Article no.	3302275	3302300
Output		
Electrical connection	400 V/3 Ph ~50 Hz	400 V/3 Ph ~50 Hz
Motor output	1.4 / 2.0 kW	0.75 / 1.5 kW
Coolant pump motor	40 W	
General Information		
Cutting angle	-45° to +45°	
Cutting angle adjustment	Via rotating bearing block	
Feed	manual	
Cutting speed	41 / 82 rpm	19 / 38 rpm
Saw blade diameter	Ø 275 mm Internal Ø 40 mm	Ø 315 mm Internal Ø 40 mm
Vice jaw width	110 mm	135 mm
Dimensions and weight		
Length	460 mm	560 mm
Width	830 mm	902 mm
height	1 700 mm	1 765 mm
Net weight	175 kg	235 kg

Material supports	Article no.
MSR 4	3357610
MSR 4H	3357001
MSR 7	3357611
MSR 7H	3357002
MSR 10	3357613
MSR 10H	3357003

Metal-cutting circular saw blade CS 275			
mm/per tooth	Teeth	Blade width	Article no.
4 mm/T	220 Z	2.5 mm	3357444
6 mm/T	140 Z	2.5 mm	3357446
8 mm/T	110 Z	2.5 mm	3357448

Metal-cutting circular saw blade CS 315			
4 mm/T	240 Z	2.5 mm	3357454
6 mm/T	150 Z	2.5 mm	3357456
8 mm/T	120 Z	2.5 mm	3357458

SAWING ACCESSORIES



Compatibility overview accessories for metal-cutting band saws

Saw accessories		SQ-V10	SQ-V13	SP 11V	SP 13V	S 100G	S 131GH	S 150G Vario	S 181	S 181G	SD 200G	S 210G	S 275N	S 275NV	SD 281V	S 285DG	S 300DG	SD 300V	SD 310V	S 350DG	S 350DG	SD 351AV	SD 500	SD 500AV
Material stand MSR 4 - 10	3357610-13							●				●	●	●	●	●								
Material stand MSR 4H - 10H	3357001-3																●	●	●	●	●	●	○	○
PVC rollers	3357609							●				●	●	●	●	●	●	●	●	●	●	●	○	○
Table extension MSR 1	3357006							●				●	●	●	●	●	●	●	●	●	●	●	○	○
Connecting plate	3357005							●				●	●	●	●	●	●	●	●	●	●	●		
Trimming and length measuring system LMS 10 - 40	3383851-4							●				●	●	●	●	●	●	●	●	●	●	●	○	○
Trimming and length measuring system LMS 1M	3383841							●				●	●	●	●	●	●	●	●	●	●	●	○	○
Trimming and length measuring system LMS 2M	3383842							●				●	●	●	●	●	●	●	●	●	●	●	○	○
AQUACUT C1	3530030							●	●	●	●	●	●	●	●	●	●	●	●	●	●	●	●	●
Levelling platen SE 1	3381012							●				●												
Levelling platen SE 2	3381016												●	●	●	●	●	●	●	●	●	●	●	●

● Recommended ○ Recommended - restrictions apply

Saw bands HSS bi-metal M 42

for sections and pipes, as well as solid material

Band dimensions:		Tooth angle	Art. no.	Fits:
1,140 x 13 x 0.65 mm	10 - 14 tpi		3357548	Manual metal-cutting band saw SQ-V10
1 335 x 13 x 0.65 mm	6 - 10 tpi	0°	3351542	Metal-cutting band saw SP 11V
1 335 x 13 x 0.65 mm	10 - 14 tpi	0°	3351543	
1 440 x 13 x 0.65 mm	6 - 10 tpi	0°	3351546	Metal-cutting band saw SP 13V Metal-cutting band saw SQ-V13
1 440 x 13 x 0.65 mm	10 - 14 tpi	0°	3351547	
1 470 x 13 x 0.65 mm	6 tpi	10°	3351109	Metal-cutting band saw S100G
1 470 x 13 x 0.65 mm	10 - 14 tpi	0°	3351110	
1 638 x 13 x 0.65 mm	6 tpi	10°	3351511	Metal-cutting band saw S 131GH
1 638 x 13 x 0.65 mm	6 - 10 tpi	0°	3351512	
1 638 x 13 x 0.65 mm	8 - 12 tpi	0°	3351517	
1 638 x 13 x 0.65 mm	10 - 14 tpi	0°	3351518	
1 735 x 12.7 x 0.9 mm	6 tpi	10°	3351521	Metal-cutting band saw S 150G Vario
1 735 x 12.7 x 0.9 mm	6 - 10 tpi	0°	3351522	
1 735 x 12.7 x 0.9 mm	10 - 14 tpi	0°	3351538	
2 080 x 20 x 0.9 mm	5 - 8 tpi	0°	3357503	Metal-cutting band saw S 210G
2 080 x 20 x 0.9 mm	5 - 8 tpi	6°	3357505	
2 080 x 20 x 0.9 mm	6 - 10 tpi	0°	3357514	
2 080 x 20 x 0.9 mm	10 - 14 tpi	0°	3357515	
2 362 x 19 x 0.9 mm	5 - 8 tpi	0°	3357522	Metal-cutting band saw S 181 Metal-cutting band saw S 181G Metal-cutting band saw SD 200G
2 362 x 19 x 0.9 mm	5 - 8 tpi	6°	3357516	
2 362 x 19 x 0.9 mm	6 - 10 tpi	0°	3357521	
2 362 x 19 x 0.9 mm	10 - 14 tpi	0°	3357520	
2 480 x 27 x 0.9 mm	5 - 8 tpi	0°	3357511	Metal-cutting band saw S 275N Metal-cutting band saw S 275NV Metal-cutting band saw SD 281V Metal-cutting band saw S 285DG
2 480 x 27 x 0.9 mm	5 - 8 tpi	6°	3357512	
2 480 x 27 x 0.9 mm	6 - 10 tpi	0°	3357524	
2 480 x 27 x 0.9 mm	6 - 10 tpi	6°	3357510	
2 480 x 27 x 0.9 mm	10 - 14 tpi	0°	3357525	
2 750 x 27 x 0.9 mm	5 - 8 tpi	0°	3357751	Metal-cutting band saw SD 300V Metal-cutting band saw S 300DG Metal-cutting band saw SD 310V
2 750 x 27 x 0.9 mm	5 - 8 tpi	10°	3357752	
2 750 x 27 x 0.9 mm	6 - 10 tpi	0°	3357753	
2 750 x 27 x 0.9 mm	10 - 14 tpi	0°	3357754	
2 925 x 27 x 0.9 mm	5 - 8 tpi	0°	3357541	Metal-cutting band saw S 350DG Metal-cutting band saw SD 351AV
2 925 x 27 x 0.9 mm	4 - 6 tpi	6°	3357540	
2 925 x 27 x 0.9 mm	6 - 10 tpi	0°	3357542	
2 925 x 27 x 0.9 mm	10 - 14 tpi	0°	3357543	
3 770 x 34 x 1.1 mm	5 - 8 tpi	0°	3357590	Metal-cutting band saw SD 500 Metal-cutting band saw SD 500AV
3 770 x 34 x 1.1 mm	6 - 10 tpi	0°	3357591	



Workpiece
The workpiece to be machined must be firmly clamped so that it cannot vibrate or rotate. Do not use damaged, bent or severely deformed workpieces. The closer the band saw guides are fixed relative to the workpiece, the more precise the cut becomes.

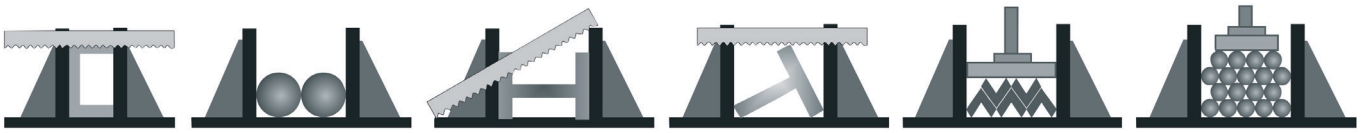

Teeth per inch
This figure describes the number of teeth per inch (25.4 mm).
As a general rule:
The shorter the cut length (e.g., sections), the finer the tpi you need to select. The greater the material attack (e.g., solid material), the coarser the tpi value used.
Too large a tpi value can cause the cut to run out as chips clog the gullet thus forcing the saw band out of its cutting line. To small a tpi value can cause teeth to break out as the cutting pressure on the individual tooth becomes too great. At least 3 teeth need to be engaged to achieve economical results.

Running in saw bands
- Correct running in guarantees a long service life.
- Sharp cutting edges with extremely small edge radii are the precondition for high cutting capacity of the saw bands.
- To achieve an optimal service life, we recommend running in the saw band appropriately.
- Depending on the material and the dimension of the material you are cutting, determine the correct cutting speed (m/min.) and feed rate (mm/min.).
- The important thing is that the new saw band should be deployed at approx. 50 % of the determined feed rate only. The idea is to avoid the extremely sharp cutting edges on the teeth being damaged by micro fracturing in case of large chip thicknesses.
- New saw bands can tend to vibrate and cause vibration noise initially. If this happens, reduce the cutting speed slightly. In case of small workpiece dimensions, the run-in should be over approx. 300 - 500 cm² of the material you are cutting.
- If you are processing large workpiece dimensions, we recommend running in for a period of approx. 15 min. After running in, gradually increase the feed rate to the target value determined previously.

Optimal chip formation
› Chips are the best indicator of a correctly adjusted feed and the correct saw band speed. Take a look at the chips you generate and set the feed correctly.

Thin chips that look like powder
› Increase the feed rate or reduce the saw band speed.



Burnt, heavy chips
› Reduce the feed rate and/or the saw band speed



Crinkly, silver and warm chips
› Optimal feed rate and sawing speed



Materials	Cutting speed (M42)
Construction steel/Machining steel	80 - 90 m/min
Case-hardened steels/Heat-treated steels	45 - 75 m/min
Unalloyed tool steels/Rolled steels	40 - 60 m/min
Alloyed tool steels/high-speed steels	30 - 40 m/min
Stainless steels	20 - 35 m/min
Heat resistant steels/Highly heat-resistant alloys	15 - 25 m/min

Teeth per inch when using HSS bi-metal bands

Standard tpi		Combined tpi		Sawing tubes and sections						
Section cross section	Number of teeth per inch	Section cross section	Number of teeth per inch	Diameter	Ø 40	Ø 80	Ø 100	Ø 150	Ø 200	Ø 300
				Wall thickness	Teeth per inch (TPI)					
‹ 12 mm	14 tpi	‹ 25 mm	10 - 14 tpi	3 mm	8 - 12	8 - 12	8 - 12	8 - 12	6 - 10	6 - 10
12 - 30 mm	10 tpi	20 - 40 mm	8 - 12 tpi	8 mm	8 - 12	6 - 10	6 - 10	5 - 8	4 - 6	4 - 6
30 - 50 mm	8 tpi	25 - 70 mm	6 - 10 tpi	12 mm	6 - 10	5 - 8	5 - 8	4 - 6	4 - 6	4 - 6
50 - 80 mm	6 tpi	35 - 90 mm	5 - 8 tpi	15 mm	5 - 8	4 - 6	4 - 6	4 - 6	3 - 4	3 - 4
80 - 100 mm	4 tpi	50 - 100 mm	4 - 6 tpi	20 mm	-	4 - 6	4 - 6	4 - 5	4 - 5	4 - 5

Teeth per inch 4 - 5 TPI not available from Optimum

Height-adjustable MSR material stand as a manual aid for supporting and moving workpieces on metal-cutting saws. H version variably adjustable up to 1 050 mm

Facts that impress in terms of quality, performance and price

- Trouble-free and material transport when feeding and unloading workpieces
- Universally deployable for metal-cutting band saws, circular saws, etc.
- Roller support, continuously adjustable
- Safe workpiece support due to solid steel rollers with high load-bearing capacity
- Infinitely extensible
- Extension options for LMS length measuring systems
- Stable frame design with strong custom profile
- Steel bearing rollers, ball-bearing borne on both sides





Fig.: MSR 4

Fig.: MSR 10



Fig.: Typical application:
OPTIsaw S 275N, material stand MSR 4, measuring system LMS 1, digit. position display DRO 1; table extension MSR 1, connecting plates

Model	MSR 4	MSR 7	MSR 10
Article no.	3357610	3357611	3357613
Model	**MSR 4H**	**MSR 7H**	**MSR 10H**
Article no.	3357001	3357002	3357003
Idler roller diameter	60 mm	60 mm	60 mm
Idler roller width	360 mm	360 mm	360 mm
Static table load	500 kg	700 kg	700 kg
Dimensions and weight			
Length x width	1 000 x 440 mm	2 000 x 440 mm	3 000 x 440 mm
height	650 - 950 mm	650 - 950 mm	650 - 950 mm
Height H version	660 - 1 050 mm	660 - 1 050 mm	660 - 1 050 mm
Net weight	30 kg / 33 kg	58 kg / 61 kg	78 kg / 83 kg

PVC rollers

Article no. 3357609



- Additionally attachable
- Made of non-slip PVC
- To avoid scratches
- Simply slot the rollers into the holder provided
- With practical wall-mount

Table extension MSR 1

Article no. 3357006

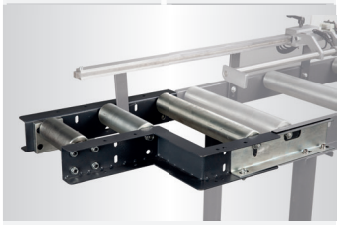

- for MSR roller conveyors
- Removable rollers
- Additionally attachable
- Can be fitted in both directions

Connecting

Article no. 3357005

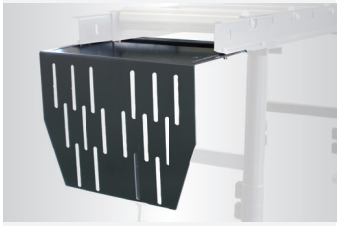

- Additionally attachable
- With add-on parts right and left
- Slots

Contents of package

- Fastening material for extension

Digital trimming and length measuring systems for attaching to MSR material stand.

For perfect length measurement and precise positioning

Facts that impress in terms of quality, performance and price

- Magnetic measuring system with magnetic strip
- For recurring measuring tasks with high precision 0.05 mm
- Automatic display switch-on
- Material stop for small pieces with extension
- Positioning slide right- and left-hand, folds up
- In case of longer breaks, the measuring system switches off and keeps the last stored dimension
- Measuring precision: ±(0.025 + 0.02 x measuring length [m])



Fig.: MSR 4 material stand with LMS 10 length measuring system

Linear guide

› Lubrication-free
› Very quiet action
› Wear resistant
› Corrosion-resistant
› Low friction values
› High static load bearing capacity

Slide

› Easily movable
› Precisely guided
› Replaceable, long-life dry plain bearings
› Easy self-assembly

Digital display

› LCD
Switching functions:
› Metric / inch / angle
› absolute position or incremental position
› Zeroing
› ABS mode, fast calibration

Model	LMS 10	LMS 20	LMS 30	LMS 40
Article no.	3383851	3383852	3383853	3383854
Technical data				
Rail length	1 000 mm	2 000 mm	3 000 mm	4 000 mm
Travel	830 mm	1 830 mm	2 830 mm	3 830 mm

Other lengths on request

Manual trimming and length measuring systems LMS 1M/LMS 2M for attaching to MSR material stand.

For perfect length measurement and precise positioning

Facts that impress in terms of quality, performance and price

- Modular system
- For perfect length measurement and precise positioning
- For recurring measuring tasks with high precision



Trimming and length measuring systems	Art. no.
› Sliding carriage with stop	
LMS 1M guide rail 1 300 mm	3383841
› Includes 1 metre rule	
LMS 2M guide rail 2 300 mm	3383842
› Includes 2 metre rule	

Magnetic strip	Art. no.
Length 1 600 mm for LMS 1M	3383876
Length 2 600 mm for LMS 2M	3383877
Yard goods (price per metre)	3383878

Extension rail	Art. no.
› only in combination with DRO1	
Length 1 300 mm for LMS-1M/2M	3383843
Length 2 600 mm for LMS-1M/2M	3383844

Digital display DRO1	3383845
› With extension kit for LMS 1M / 2M	

- Radius/diameter mode measurement
- Parameter memory
- Absolute/incremental
- Inch/metric adaptation
- 8-digit LCD display
- Multifunctional LCD display
- Coordinate conversion
- Adjustable angular



AQUACUT C1	3530030
› 10 litre cannister	
› For mixing emulsions	
› Drilling and cooling emulsion	
› High-pressure resistant and containing mineral oil, for long tool life and clean surfaces	
› Emulsifiable with water, microbe-resistant and kind to the skin	



Levelling platen	Art. no.
› The machines and equipment can be installed without anchors and precisely levelled using the height adjustment system.	
› non-slip rubberised	
SE 1	3381012
SE 2	3381016



SURFACE GRINDERS



OPTIgrind® GT 22

NEW

TRADES

Manual surface grinding machine by OPTIMUM for finishing metal surfaces.
Precision and hight grinding quality **with digital position display DPA 31**

Facts that impress in terms of quality, performance and price

- Permanent magnet for holding the workpiece
- Premium spindle with precision taper roller bearings
- Tempered and polished bed guides
- Turcite-B coated counter guides for excellent wear-resistance and low friction
- Integrated grinding wheel dressing device
- Machine chassis made of stable, torsion resistant cast material for maximum rigidity and stability
- Backlash-free V-flat guide on the Z axis and flat guides on the X and Y axes
- Trapezoidal threaded spindle on the Y axis
- Manual centralised lubrication system
- All flat guides are finely honed and thus guarantee a high precision of all manual movements
- LED lamp
- Safety electrical system in 24 V DC
- Grinding precision: 0.005 mm
- Corundum grinding wheel 46 grain for all popular metals included in standard scope of delivery
- Two-channel safety electrics
- EMC filter class
- Substantial energy savings thanks to IE3 motor
- Coolant unit with external coolant tank

Digital position display DPA 31-2

Display: NEW
› User-friendly membrane keyboard, splash water protected, dazzle free and easy to clean

New measuring strips:
› The electronic measuring components of the measuring strips are protected and sealed in the housing
› Provides accurate and reliable measurement results even if the measuring system is operated in oil or coolant
› Tolerant towards vibration and magnetic interference

Permanent magnet

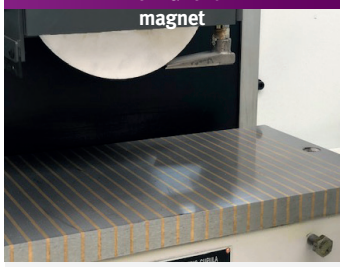

› Fast and safe workpiece clamping



Technical data and dimension

Model	GT 22
Article no.	3111020
Technical data	
Electrical connection	400 V/3 Ph ~50 Hz
Grinding wheel drive motor	1.5 kW
Coolant pump motor	125 W
Surface grinding table	
Surface grinding table length x width	200 x 450 mm
Magnetic clamping plate	200 x 500 mm
T-slot size/number of slots	14 mm / 1
Load bearing capacity of grinding table including permanent magnet	128 kg
Workpiece size length x width x height	450 x 200 x 350 mm
Spacing spindle centre - grinding table	max. 450 mm
Grinding wheel	
Size of grinding wheel	Ø 200 x 20 mm, shafts Ø 31.75 mm
Clearance grinding wheel - grinding table	405 mm
Circumferential speed of grinding wheel	33 m/s
Grinding spindle concentricity	0.005 mm
Manual stroke	
X axis	500 mm
Z axis	240 mm
Rotational speeds	
Constant spindle speed	2 850 rpm
Dimensions and weight	
Length x width x height	1,970 x 1,300 x 1,700 mm
Net weight	900 kg

Dimensions

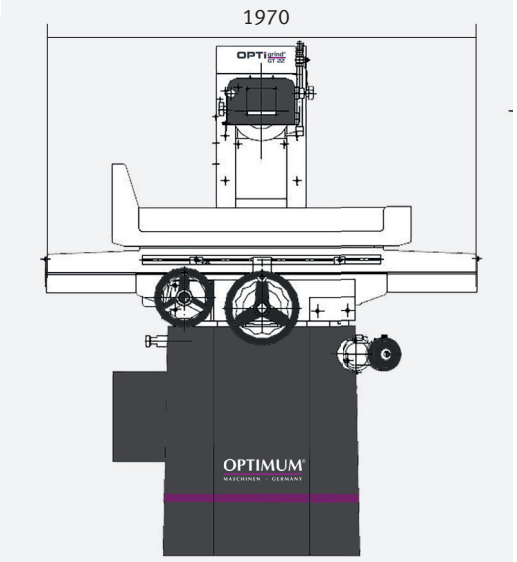

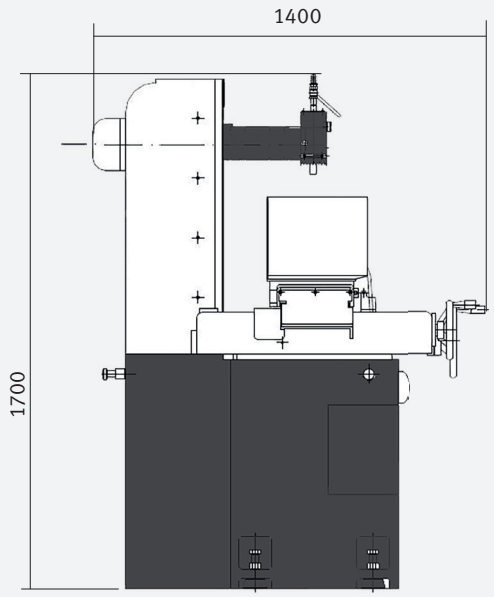

See page 274 for accessories

Contents of package
• Corundum grinding wheel 46 grain
• Digital position display
• Balancing stand
• Degaussing unit
• Grinding wheel and clamping chuck
• Dresser for grinding wheel (with diamond tip)
• Wheel balancing mandrel
• Wheel dresser
• Base plate for dresser
• Levelling feet
• Operating tool in toolbox

OPTIgrind® GT 25

NEW

TRADES

Solid **surface grinding machine by OPTIMUM** with compact footprint.
Impresses with easy handling, precision and great grinding quality.

Facts that impress in terms of quality, performance and price

- Electro-magnetic clamping plate for holding the workpiece with automatic degaussing function
- Premium spindle with precision taper roller bearings
- Tempered and polished bed guides
- Turcite-B coated counter guides for excellent wear-resistance and low friction
- Grinding spindle with premium precision bearings
- Integrated grinding wheel dresser
- Digital position display
- Machine chassis made of stable, torsion resistant cast material for maximum rigidity and stability
- Backlash-free V-flat guide on the Z axis and flat guides on the X and Y axes
- Trapezoidal threaded spindle on the Y axis
- Precision ball screws
- Guideways and transport spindle with centralised lubrication system
- All flat guides are finely honed and thus guarantee highest precision of all manual movements
- Safety electrical system in 24 V DC
- Generously dimensioned, decoupled hand wheels on all three axes
- Hydraulic lines according to DIN EN 853
- Grinding precision: 0.005 mm
- Corundum grinding wheel 46 grain for all popular metals included in standard scope of delivery
- Pivoting control panel substantially facilitates work
- Separate hydraulics unit with heat exchanger avoids vibrations and thermal load
- Two-channel safety electronics
- Grinding table splash guard
- EMC filter class
- Coolant unit with external coolant tank, capacity 100 litres
- Substantial energy savings thanks to IE3 motor



Digital position display DPA 31-2

NEW



Display:

› User-friendly membrane keyboard, splash water protected, dazzle free and easy to clean

New measuring strips:

› The electronic measuring components of the measuring strips are protected and sealed in the housing

› Provides accurate and reliable measurement results even if the measuring system is operated in oil or coolant

› Tolerant towards vibration and magnetic interference

Central lubrication



› Prevents wear, repair costs and unnecessary downtime to a major extent

Electromagnetic clamping plate

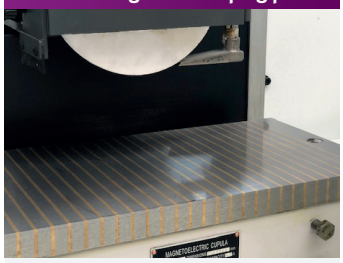

› Fast and safe workpiece clamping

Hydraulic power



› External hydraulic power unit with heat exchanger for constant oil temperature

Touch Screen

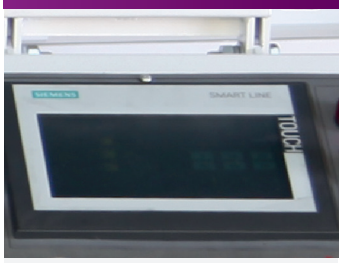

› for entering work data and displaying information

› Hand wheel for moving the Y axis

› Swivelling control panel



Technical data and dimension

Model	GT 25
Article no.	3111025
Technical data	
Electrical connection	400 V/3 Ph ~50 Hz
Total connected load	3.7 kW
Grinding wheel drive motor	2.2 kW
Hydraulic motor	0.75 kW
Coolant pump motor	70 W
Surface grinding table	
Surface grinding table length x width	254 x 508 mm
Electro-magnetic clamping plate	250 x 500 mm
T-slot size/number of slots	14 mm / 1
Grinding table load bearing capacity including electromagnetic clamping plate	180 kg
Workpiece size length x width x height	508 x 254 x 350 mm
Spacing spindle centre - grinding table	max. 450 mm
Oscillating speeds of table	5 - 25 m/min
Grinding wheel	
Size of grinding wheel	Ø 200 x 20 mm, shafts Ø 31.75 mm
Clearance grinding wheel - grinding table	405 mm
Circumferential speed of grinding wheel	33 m/s
Grinding spindle concentricity	0.005 mm
Oscillating stroke/travel stroke	
Oscillating stroke X-axis	560 mm
Travel Z axis	275 mm
Z axis	
Continuous transverse feed	0.1 - 8 mm
Fast motion on Y axis	990 mm/min
Scale division on handwheel	0.02 mm
Y axis	
Step widths of fast motion feed	0.005 | 0.01 | 0.02 | 0.03 | 0.04 | 0.05
Fast motion adjustment on the Z axis	480 mm/min
Scale division on handwheel	0.005 mm
Rotational speeds	
Constant spindle speed	2 850 rpm
Dimensions and weight	
Length x width x height	2,250 x 2,150 x 1,675 mm
Net weight	1 900 kg

See page 274 for accessories

Contents of package
• Corundum grinding wheel 46 grain
• Digital position display
• Balancing stand
• Degaussing unit
• Grinding wheel and clamping chuck
• Dresser for grinding wheel (with diamond tip)
• Wheel balancing mandrel
• Wheel dresser
• Base plate for dresser
• Levelling feet
• Operating tool in toolbox

Footprint

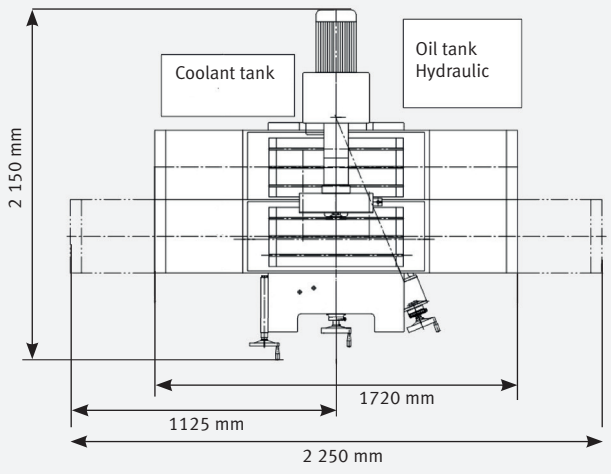

OPTIgrind® GT 30

NEW

TRADES

Solid **surface grinding machine by OPTIMUM** equipped with digitally controlled automatic vertical feed and **digital position display DPA 31**

Facts that impress in terms of quality, performance and price

- Electro-magnetic clamping plate for holding the workpiece with automatic degaussing function
- Premium spindle with precision taper roller bearings
- Tempered and polished bed guides
- Turcite-B coated counter guides for excellent wear-resistance and low friction
- Grinding spindle with premium precision bearings
- The grinding wheel can be sharpened with a dressing unit directly on the machine
- Digital position display
- Machine chassis made of stable, torsion resistant cast material for maximum rigidity and stability
- Guideways for longitudinal, transverse and vertical movements are play-free and designed to self-centre as V and flat rails
- Precision ball screws
- Guideways and transport spindle with centralised lubrication system
- All flat guides are finely honed and thus guarantee highest precision of all manual movements
- Safety electrical system in 24 V DC
- Generously dimensioned, decoupled hand wheels on all three axes
- Time-controlled centralised lubrication system
- Hydraulic lines according to DIN EN 853
- Grinding precision: 0.005 mm
- Corundum grinding wheel 46 grain for all popular metals included in standard scope of delivery
- Pivoting control panel substantially facilitates work
- Two-channel safety electronics
- Grinding table with splash protection enclosure
- Coolant unit with external coolant tank, capacity 100 litres
- Digitally controlled automatic vertical feed with servo motor
- Motorised vertical height adjustment via spindle
- Hydraulic and continuously adjustable longitudinal feed
- EMC filter class
- Substantial energy savings thanks to IE3 motor



Digital position display DPA 31-2

NEW



Display:
› User-friendly membrane keyboard, splash water protected, dazzle free and easy to clean

New measuring strips:
› The electronic measuring components of the measuring strips are protected and sealed in the housing
› Provides accurate and reliable measurement results even if the measuring system is operated in oil or coolant
› Tolerant towards vibration and magnetic interference

Dressing unit



› Manual parallel dressing unit

Hydraulic power



› External hydraulic power unit with heat exchanger for constant oil temperature

Electromagnetic clamping plate

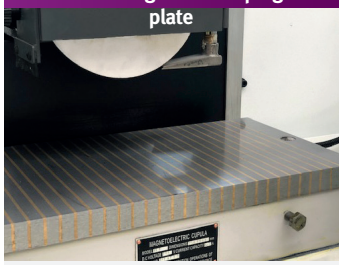

› Fast and safe workpiece clamping

Touch Screen



› for entering work data and displaying information
› Hand wheel for moving the Y axis
› Swivelling control panel

Technical data and dimension

Model	GT 30
Article no.	3111030
Technical data	
Electrical connection	400 V/3 Ph ~50 Hz
Total connected load	7.5 kW
Grinding wheel drive motor	4 kW
Hydraulic motor	2.2 kW
Coolant pump motor	90 W
Surface grinding table	
Surface grinding table length x width	305 x 635 mm
Electro-magnetic clamping plate	300 x 600 mm
T-slot size/number of slots	14 mm / 1
Grinding table load bearing capacity including electromagnetic clamping plate	270 kg
Workpiece size length x width x height	635 x 305 x 405 mm
Spacing spindle centre - grinding table	max. 580 mm
Oscillating speeds of table	5 - 25 m/min
Grinding wheel	
Size of grinding wheel	350 x 40 x shafts Ø 127 mm
Clearance grinding wheel - grinding table	405 mm
Circumferential speed of grinding wheel	27 m/s
Grinding spindle concentricity	0.005 mm
Oscillating stroke/travel stroke	
Oscillating stroke X-axis	765 mm
Travel Z axis	340 mm
Z axis	
Continuous transverse feed	0.1 - 8 mm
Fast motion on Y axis	990 mm/min
Scale division on handwheel	0.02 mm
Y axis	
Step widths of fast motion feed	0.005 | 0.01 | 0.02 | 0.03 | 0.04 | 0.05
Fast motion adjustment on the Z axis	480 mm/min
Scale division on handwheel	0.005 mm
Rotational speeds	
Constant spindle speed	1 450 rpm
Dimensions and weight	
Length x width x height	2,800 x 2,205 x 1,900 mm
Net weight	3 000 kg

See page 274 for accessories

Contents of package
• Corundum grinding wheel 46 grain
• Digital position display
• Balancing stand
• Degaussing unit
• Grinding wheel and clamping chuck
• Dresser for grinding wheel (with diamond tip)
• Wheel balancing mandrel
• Wheel dresser
• Base plate for dresser
• Levelling feet
• Operating tool in toolbox

Footprint

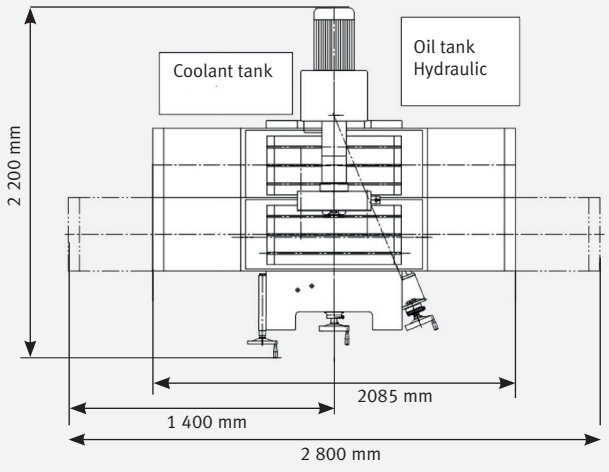

OPTIgrind® GT 40

NEW

TRADES

Solid **surface grinding machine by OPTIMUM** equipped with digitally controlled automatic vertical feed and **digital position display DPA 31**

Facts that impress in terms of quality, performance and price

- Electro-magnetic clamping plate for holding the workpiece with automatic degaussing function
- Premium spindle with precision taper roller bearings
- Tempered and polished bed guides
- Turcite-B coated counter guides for excellent wear-resistance and low friction
- Grinding spindle with premium precision bearings
- The grinding wheel can be sharpened with a dressing unit directly on the machine
- Digital position display
- Machine chassis made of stable, torsion resistant cast material for maximum rigidity and stability
- Guideways for longitudinal, transverse and vertical movements are play-free and designed to self-centre as V and flat rails
- Precision ball screws
- Guideways and transport spindle with centralised lubrication system
- All flat guides are finely honed and thus guarantee highest precision of all manual movements
- Safety electrical system in 24 V DC
- Generously dimensioned, decoupled hand wheels on all three axes
- Time-controlled centralised lubrication system
- Hydraulic lines according to DIN EN 853
- Grinding precision: 0.005 mm
- Corundum grinding wheel 46 grain for all popular metals included in standard scope of delivery
- Pivoting control panel substantially facilitates work
- Two-channel safety electronics
- Grinding table with splash protection enclosure
- Coolant unit with external coolant tank, capacity 100 litres
- Digitally controlled, automatic vertical feed with servo motor
- Motorised vertical height adjustment via spindle
- Hydraulic and continuously adjustable longitudinal feed
- EMC filter class
- Substantial energy savings thanks to IE3 motor



Digital position display DPA 31-2

NEW



Display:

› User-friendly membrane keyboard, splash water protected, dazzle free and easy to clean

New measuring strips:

The electronic measuring components of the measuring strips are protected and sealed in the housing

› Provides accurate and reliable measurement results even if the measuring system is operated in oil or coolant

› Tolerant towards vibration and magnetic interference

Dressing unit



› Manual parallel dressing unit

Hydraulic power unit



› Prevents wear, repair costs and unnecessary downtime to a major extent

Electromagnetic clamping plate

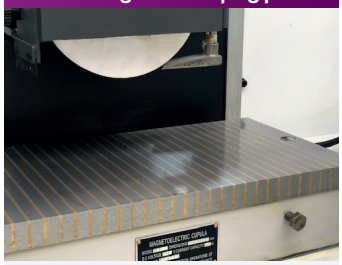

› Fast and safe workpiece clamping

Touch Screen



› for entering work data and displaying information

› Hand wheel for moving the Y axis

› Swivelling control panel

Technical data and dimension

Model	GT 40
Article no.	3111040
Technical data	
Electrical connection	400 V/3 Ph ~50 Hz
Total connected load	7.5 kW
Grinding wheel drive motor	4 kW
Hydraulic motor	2.2 kW
Coolant pump motor	90 W
Surface grinding table	
Surface grinding table length x width	406 x 813 mm
Electro-magnetic clamping plate	400 x 800 mm
T-slot size/number of slots	14 mm / 3
Grinding table load bearing capacity including electromagnetic clamping plate	500 kg
Workpiece size length x width x height	813 x 406 x 405 mm
Spacing spindle centre - grinding table	max. 580 mm
Oscillating speeds of table	5 - 25 m/min
Grinding wheel	
Size of grinding wheel	350 x 40 x shafts Ø 127 mm
Clearance grinding wheel - grinding table	405 mm
Circumferential speed of grinding wheel	27 m/s
Grinding spindle concentricity	0.005 mm
Oscillating stroke/travel stroke	
Oscillating stroke X-axis	830 mm
Travel Z axis	420 mm
Z axis	
Continuous transverse feed	0.1 - 8 mm
Fast motion on Y axis	990 mm/min
Scale division on handwheel	0.02 mm
Y axis	
Step widths of fast motion feed	0.005 | 0.01 | 0.02 | 0.03 | 0.04 | 0.05
Fast motion adjustment on the Z axis	480 mm/min
Scale division on handwheel	0.005 mm
Rotational speeds	
Constant spindle speed	1 450 rpm
Dimensions and weight	
Length x width x height	3,600 x 2,400 x 1,900 mm
Net weight	3 600 kg

See page 274 for accessories

Contents of package
• Digital position display
• Coolant system
• Balancing station and balancing mandrel
• Corundum grinding wheel 46 grain
• Diamond stylus
• Bed enclosure
• Levelling feet
• Operating tool
• LED lamp
• Electromagnetic clamping plate
• Degaussing function

Footprint

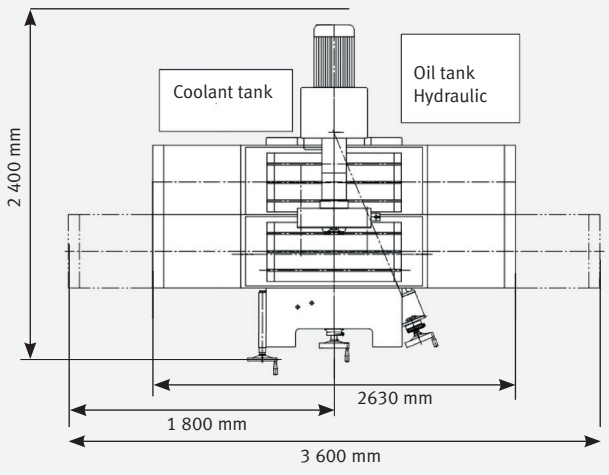

NEW

Magnetic separator with paper belt filter MPS 1

- Magnetic separator filters out metal contaminants
- Paper belt filter for versatile and safe filtering of fluids such as grinding fluids, cooling lubricants, etc. during operation.



Magnetic separator with paper belt filter MPS 1	
Article no.	3112000
Filtration (water-based emulsion)	30 ~ 40 µm
Coolant pump flow rate	25 litres per minute
Tank volume	120 litres
Overall dimensions L x W x H	1,290 x 460 x 580 mm
Diameter of (non-woven) filter cloth	Ø 200 mm
Width of filter cloth	400 mm
Coolant pump drive power	120 W
Filter cloth feed motor drive power	90 W
Weight	120 kg

Spare filter paper	
Article no.	3112001
Width of paper filter	400 mm
Length of paper filter	100 metres

Grinding wheel adapter	Article no.
For fast grinding wheel change	
GT 22 / GT 25	3112010
GT 30 / GT 40	3112011



Diamond dresser	3112025
for the grinding wheel	
3/8 x 2“ x 1.00 carat	



Corundum grinding wheel	Article no.
Dimensions: 200 x 20 x 31.75 mm	
46 grain	3112040
60 grain	3112042
80 grain	3112044



Corundum grinding wheel	Article no.
Dimensions: 350 x 40 x 127 mm	
46 grain	3112050
60 grain	3112052
80 grain	3112054



The GT 25, GT 30 and GT 40 series models are equipped with automatic feed control. Various grinding cycles are available as shown in the diagram.
Workpieces can be individually processed by entering the number of feeds with a minimum possible feed of 0.001 mm and by selecting the type of grinding.
The maximum possible feed per sequence step during automatic feed control is 0.01 mm.
A further possibility is to enter the number of grinding passes without grinding wheel feed in order to enable "firing" on the workpiece

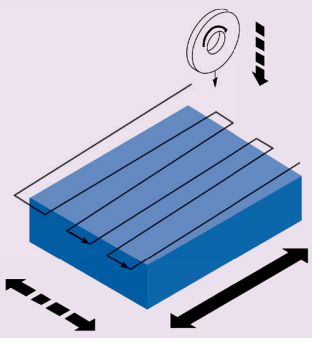

Surface grinding with feed at start point

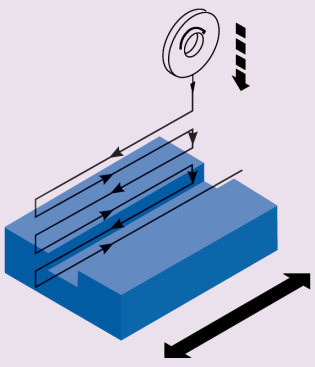

Groove grinding with feed at start point

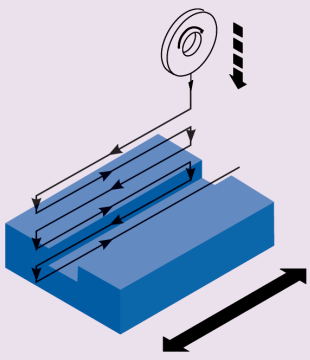

Groove grinding with feed at start and end point

DRILLING/GRINDING MACHINES



DIY

The handy drill bit grinding device by quantum.

For easy sharpening of twist drill bits from Ø 3 mm to Ø 13 mm

Facts that impress in terms of quality, performance and price

- Easy to operate for inexpensive grinding of twist drill bits with two cutting edges
- Drill bit grinding without prior experience - clean, fast and precise
- Easy to transport
- Easy replacement of the grinding wheel
- Positively-driven sharpening action, thus easy to operate
- Automatic grinding of the tip geometry thanks to cam
- Robust plastic housing with anti-slip base
- Diamond grinding stone with long service life for the perfect grind

DRILL BIT GRINDERS



Fig.: GQ-D13

Three steps to a ground drill bit



Adjust the drill bit
› Twist drills are aligned in projection length and at the correct angle



Sharpening the drill bit
› Through slight rotation from stop to stop



Tipping the drill bit
› Again through slight rotation from stop to stop

Model	GQ-D13
Article no.	3140020
Output	
Electrical connection	230 V/1 Ph ~50 Hz
Motor output	80 W
Technical data	
Speed continuously variable	4 200 rpm
Grinding wheel	Ø 78 mm
Grinding capacity drill bits	Ø 3 mm to Ø 13 mm
Dimensions and weight	
Length x width x height	220 x 200 x 160 mm
Net weight	2.5 kg

Contents of package
› Diamond grinding wheel
› Collet chuck holder

Accessories	Article no.
Replacement grinding wheel	3140021
Crystalline cubic boron nitride Grain size: 170 - 200 Applications: High-speed steel (HSS)	

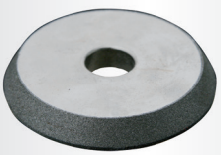

TRADES

The handy drill bit grinding device - ideal for grinding twist drill bits

Facts that impress in terms of quality, performance and price

- Easy to operate for inexpensive grinding of twist drill bits with two cutting edges
- Drill bit grinding without prior experience - clean, fast and precise
- Easy to transport
- Grinding stone with long service life for the perfect grind on HSS (high-speed steel) drill bits
- Diamond grinding stone available as option for HM drill bits from accessories programme.
- Fully equipped with ER spring collets in the machine interior

DRILL BIT GRINDERS



Fig.: GH10T



Fig.: GH15T

YouTube

Follow this for the video presentation of our drill bit grinding machine GH 15T
Subscribe to our YouTube channel, to avoid missing any of the new videos:
www.youtube.com/user/OptimumMaschinen

Drill bit



› ... with blunt cutting edges

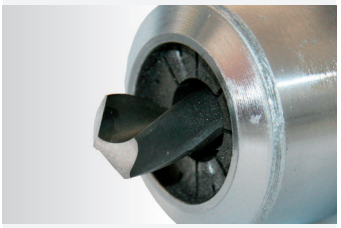

› ..fast and easy regrinding

Comprehensive scope of delivery
with complete assortment of spring collets



GH10T
› 11 units spring collet ER 20
Sizes Ø 2 to Ø 13 mm



GH 15T
› 6 units spring collet ER 20
Sizes Ø 3 to Ø 8 mm
› 22 units spring collet ER 40
Sizes Ø 8 to Ø 30 mm

Model	GH10T	GH 15T
Article no.	3100110	3100115
Output		
Electrical connection	230 V/1 Ph ~50 Hz	230 V/1 Ph ~50 Hz
Motor output	180 W	450 W
Technical data		
Grinding wheel	Steel disc coated with cubic crystalline boron nitride	
Collet chuck holder	ER20 DIN 6499	ER20 and ER 40 DIN 6499
Speed continuously variable	5 300 rpm	5 000 rpm
Tip sharpening angle	90° - 135°	90° - 145°
Grinding capacity drill bits	Ø 3 mm to Ø 13 mm	Ø 3 mm to Ø 30 mm
Dimensions and weight		
Length x width x height	310 x 180 x 190 mm	450 x 240 x 270 mm
Net weight	9.5 kg	33 kg

Accessories	Article no.
for GH10T	
Replacement grinding wheel Crystalline cubic boron nitride Grain size: 170 - 200 Applications: High-speed steel (HSS)	3100126
Replacement grinding wheel Diamond Grain size: 150 Applications: carbides	3100131
for GH15T	
Replacement grinding wheel Crystalline cubic boron nitride Grain size: 170 - 200 Applications: High-speed steel (HSS)	3100127
Replacement grinding wheel Diamond Grain size: 150 Applications: carbides	3100132

TRADES

Versatile graver and tool grinding machine for various tool geometries

Facts that impress in terms of quality, performance and price

- Many pivoting and adjustment options usable for creating gravers (cylindrical, centric, tapered)
- For grinding stamps, twist drills, electrodes, lathe tools, centres, etc.
- High level of precision thanks to rugged machine body and vibration-free driven precision grinding spindle
- Easy handling and operation
- Indexing head with 24 latching positions
- Adjustable dressing device

GRAVER GRINDING MACHINE



Model	GH20T
Article no.	3100125
Output	
Electrical connection	400 V/3 Ph ~50Hz
Motor output	370 W
Grinding wheel speed, diamond	5 000 rpm
Max. grinding speed	35 m/s
Motor speed	2 750 rpm
Tool holder travel	140 mm
Tool holder fine adjustment	18 mm
Longitudinal fine adjustment	6 mm
Adjustable angle	
vertical/rear side	0° - 40°
horizontal/conical grinding	0° - 180°
Negative angles	0° - 52°
Latching setting angle of rotation	22* x 15° 1 80°
Collet chuck holder	
Clamping range	Ø 1- 12 mm
Clamping jaw type	385E (5C), DIN 6341
Dimensions and weight	
Length x width x height	350 x 450 x 340 mm
Net weight	45 kg

* Two latching positions occupied for sharpening drill bits

Replacement grinding wheel	Grain size	Area of application	Article no.
Corundum	K 80	Fast-working steel (HSS)	3100128
Diamond	K 150	Carbide	3100129

YouTube

Follow this for the video presentation of our drill bit grinding machine GH 20T **Subscribe** to our YouTube channel, to avoid missing any of the new videos: www.youtube.com/user/OptimumMaschinen


Fig.: Corundum

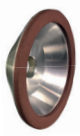
Fig.: Diamond

Comprehensive scope of



› Spring collets 385E (5C) DIN 6341 Ø 37.5 mm; L=89 mm; 20°
› Sizes Ø 4/6/8/10/12 mm



› Corundum cup grinding wheel Ø 100 x 51 x Ø 20 mm
› Diamond cup grinding wheel Ø 100 x 51 x Ø 20 mm (pre-assembled in as-delivered condition)

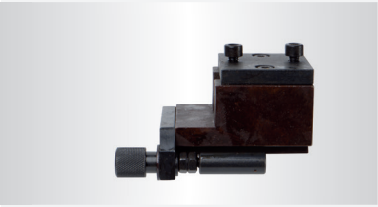

› Device for sharpening lathe tools

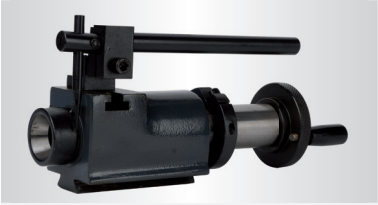

› Device for sharpening end mills



› Device for sharpening twist drill bits



› Operating tool

BELT SANDERS



NEW

TRADES

Belt grinding machine offers the user a maximum of application possibilities on a minimal footprint

Facts that impress in terms of quality, performance and price

- Heavy, durable industrial design with maintenance-free motor
- Long service life and quiet action thanks to balanced rotor with quality ball bearings
- Sturdy and stable machine body
- Tray for safety glasses

BELT GRINDER

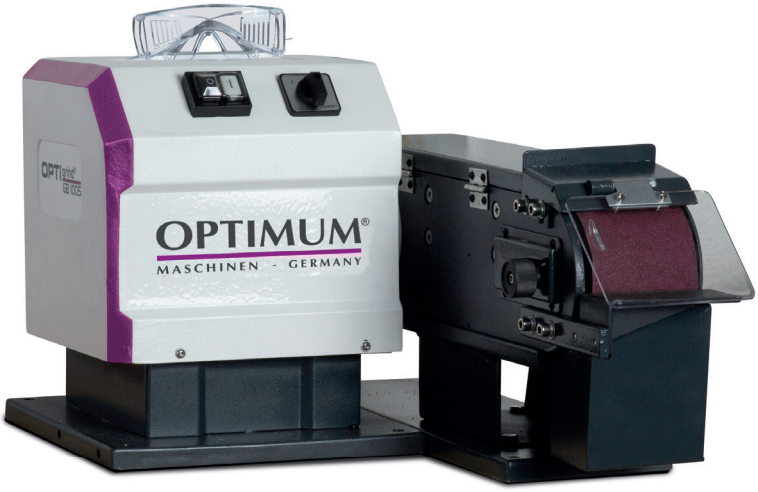



Dimensions

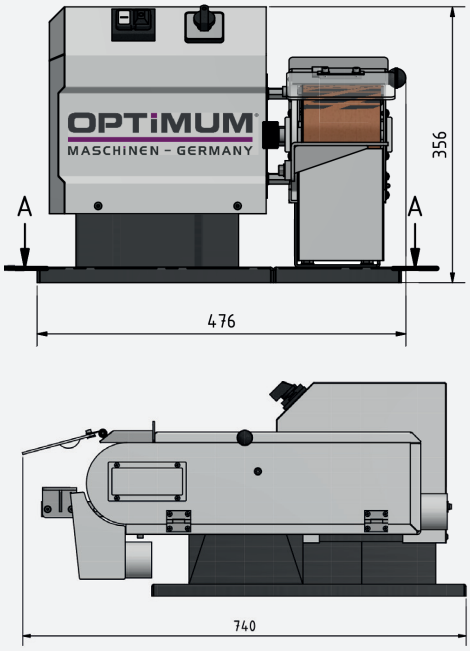





Fig. shows sample application

Model	GB 100S
Article no.	3101660
Output	
Electrical connection	400 V/3 Ph ~50 Hz
Motor output	1.3 / 1.8 kW
Grinding belt	
Grinding belt width - length	100 x 1 190 mm
Extraction port	Ø 60 mm
Usable contact surface for grinding at top on grinding belt	345 x 100 mm
Circumferential speed of grinding belt	19.4 m/s at 2 850 rpm
Rotational speed	1 450 / 2 850 rpm
Dimensions and weight	
Length x width x height	740 x 476 x 356 mm
Net weight	47 kg

Machine mobile base	Article no.
GU 2	3107115
› Cyclone extraction unit with two motors	
› Noise-insulated	

Information on machine chassis, see page 307

Contents of package
› Grinding belt

Grinding belt	PQ	Article no.
Grain size 40	5 units	3357637
Grain size 40	5 units	3357638
Grain size 80	5 units	3357639
Grain size 120	5 units	3357640

Belt grinders in heavy and rugged industrial design for roughing, finishing and profile grinding of various materials in continuous operations

Facts that impress in terms of quality, performance and price

- Time-saving deburring of edges and weld polishing
- Sturdy and vibration-free design
- Powerful motor
- Grinding table pivots through 22° - 50°
- Continuously adjustable top stop supports fast and convenient initial grinding of workpieces
- Large surface grinding surface
- Additional safety device
- Front extraction duct for attaching an extraction unit
- Spark guard
- Workpiece support allows grinding at the required angle
- One grinding belt included in standard scope of delivery

Surface grinding surface



› Open throughout and to rear
› Also perfectly suited for machining longer workpieces

Operation



› Emergency stop button
› Setting the angle of inclination

BELT GRINDER



Fig.: GBS 75



Fig.: GBS150

Model	GBS 75	GBS 150
Article no.	3321155	3321160
Output		
Electrical connection	400 V/3 Ph ~50 Hz	400 V/3 Ph ~50 Hz
Motor output	1.5/2.2 kW	1.5/2.2 kW
Rotational speeds		
Rotational speed	1 450 / 2 850 rpm	1 450 / 2 850 rpm
Grinding belt		
Grinding belt dimensions	75 x 2 000 mm	150 x 2 000 mm
Surface grinding surface	98 x 60 mm	173 x 60 mm
Dimensions and weight		
Extraction duct nominal width outside	Ø 60 mm	Ø 60 mm
Dimensions L x W x H	430 x 1,000 x 937 mm	500 x 1,070 x 937 mm
Height: Bottom pivot bearing	1 035 mm	1,065 mm
Height: Top pivot bearing	1,090 mm	1,065 mm
Net weight	72 kg	87.5 kg

Contents of package

› Grinding belt 60 grain
› Allen key

Grinding belts GBS 75	Article no.	PQ
Grain size 40	3357642	5 units
Grain size 40	3357644	5 units
Grain size 80	3357646	5 units
Grain size 120	3357648	5 units
Grain size 180	3357649	5 units
Grain size 240	3357650	5 units

Grinding belts GBS 150	Article no.	PQ
Grain size 40	3357672	5 units
Grain size 40	3357674	5 units
Grain size 80	3357676	5 units
Grain size 120	3357678	5 units
Grain size 180	3357679	5 units
Grain size 240	3357680	5 units

PLATE GRINDING MACHINES



NEW

TRADES

OPTIMUM® MASCHINEN - GERMANY

Plate grinding machine for processing surfaces, edges and curves

Facts that impress in terms of quality, performance and price

- Heavy, durable industrial design with maintenance-free motor
- Long service life and quiet action thanks to balanced rotor with quality ball bearings
- Versatile areas of application:
- For roughing, fine and moulding grinding work
- Sturdy and stable machine body
- Balanced aluminium grinding wheel for smooth action
- Powerful motor
- Delivered with grinding sheet
- Tray for safety glasses

DISK GRINDER



Dimensions

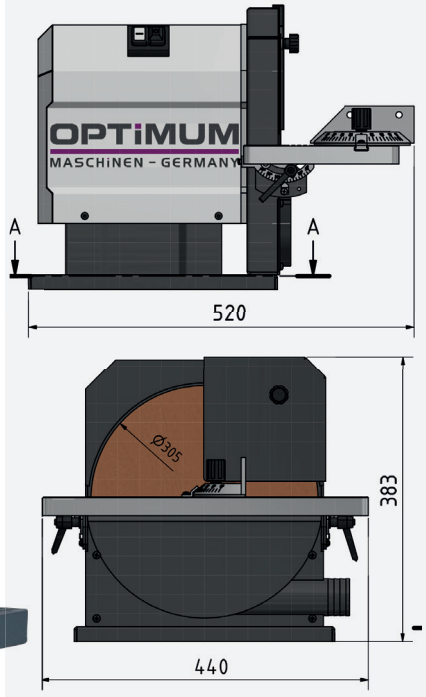



Hook and loop fastener pad



› Good grinding wheel adhesion, easy replacement

Mitre stop



› Mitre stop swivels through 180°
› Grinding table pivots up to ± 45°

Model	GB 305D
Article no.	3101675
Output	
Electrical connection	400 V/3 Ph ~50 Hz
Motor output	1.1 kW
Grinding wheel	
Dimensions	Ø 305 mm
Extraction port	Ø 50 mm
Table support	440 x 210 mm
Adjustment of angle stop	1 80°
Grinding attachment swivel range	0 - 45°
Rotational speed	1 450 rpm
Dimensions and weight	
Length x width x height	560 x 440 x 380 mm
Net weight	26.5 kg

Chassis

GU 1 - 400 V with extraction unit	3107109
GU 4	3107119

Information on machine chassis, see page 307

Accessories

Grinding sheets	Article no.	PQ
› Hook and loop fastener		
Grain size 40	3357854	5 units
Grain size 40	3357856	5 units
Grain size 80	3357858	5 units
Grain size 100	3357860	5 units
Grain size 120	3357862	5 units
Grain size 150	3357865	5 units
Grain size 180	3357866	5 units
Grain size 240	3357867	5 units

Extraction hose	3107111	35.00
2 flexible extraction tubes		

DIY

Disc grinder for machining metal surfaces

Facts that impress in terms of quality, performance and price

- Versatile areas of application:
- For roughing, fine and moulding grinding work
- Sturdy and stable machine body
- Balanced aluminium grinding wheel for smooth action
- Powerful motor
- Delivered with grinding sheet bonded onto grinding wheel

DISK GRINDER



Fig.: TS 305

Extraction port



› Factory standard extraction duct with two diameters for attaching an extraction unit
› Outside nominal width ± Ø 30/ Ø 38 mm

Mitre stop

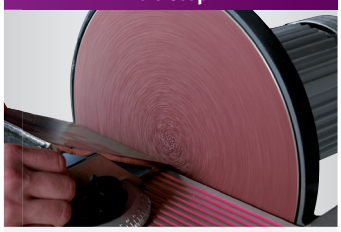

› Factory standard mitre stop pivots up to ± 60°
› Grinding table pivots up to ± 45°

Hook and loop fastener pad



› Optional accessories (Article no.: 3357801). Good grinding wheel adhesion, easy replacement

Model	TS 305
Article no.	3310305
Output	
Electrical connection	230 V/1 Ph ~50 Hz
Motor output	900 W
General Information	
Grinding wheel	Ø 305 mm
Rotational speed	1 420 rpm
Table support	155 x 440 mm
Adjustment of angle stop	± 60°
Pivoting grinding table	± 45°
Dimensions and weight	
Length x width x height	440 x 445 x 365 mm
Net weight	30 kg

Contents of package
› Adjustable angle stop
› Grinding sheet

Accessories	Article no.
Hook and loop fastener pad	3357801

Grinding sheets	Article no.	PQ
› Hook and loop fastener		
Grain size 40	3357854	5 units
Grain size 40	3357856	5 units
Grain size 80	3357858	5 units
Grain size 100	3357860	5 units
Grain size 120	3357862	5 units
Grain size 150	3357865	5 units
Grain size 180	3357866	5 units
Grain size 240	3357867	5 units

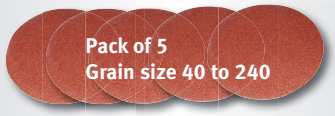

DOUBLE GRINDERS



NEW

TRADES

Double grinders by OPTIMUM.

A quality product for trades and industry.

Facts that impress in terms of quality, performance and price

- Heavy, durable industrial design with maintenance-free motor for continuous use
- Housing made of strand cast aluminium
- Long service life and quiet action thanks to balanced rotor with quality ball bearings
- Spark guard on each grinding wheel reduces flying sparks and is made of break-proof material
- Sturdy adjustable workpiece support
- Vibration-damping rubber feet
- Coarse and fine grinding wheel (K36/K60) included in standard scope of delivery



Fig.: GU 30



Fig.: GU 15 - GU 25

BENCH GRINDERS

Vario conversion see page 300

Contents of package

› 1 grinding wheel each normal corundum 36/80 grain

Accessories

For machine chassis, see page 300
For grinding wheels, see page 310

NEW

Model	GU 15	GU 18	GU 20	GU 25	GU 30
Article no. (230 V)	3101505	3101510	3101515	-	-
Article no. (400 V)	-	-	3101520	3101525	3101530
Technical data					
Elec. connection	230 V/1 Ph ~50 Hz	230 V/1 Ph ~50 Hz	230 V / 400 V ~50 Hz	400 V/3 Ph ~50 Hz	400 V/3 Ph ~50 Hz
Motor output	450 W	450 W	600 W	1.5 kW	2.2 kW
Grinding wheels dimensions	Ø 150 x 20 mm	Ø 175 x 25 mm	Ø 200 x 30 mm	Ø 250 x 40mm	Ø 300 x 50 mm
Shaft diameter	Ø 16 mm	Ø 32 mm	Ø 32 mm	Ø 32 mm	Ø 75 mm
Rotational speeds	2 850 rpm	2 850 rpm	2 850 rpm	2 850 rpm	1 450 rpm
Extraction duct nominal width	Ø 34 mm	Ø 34 mm	Ø 34 mm	Ø 34 mm	Ø 35 / Ø 50 mm
Dimensions L x W x H	389 x 205 x 265 mm	389 x 235 x280 mm	495 x 260 x330 mm	471 x 320 x 365 mm	765 x 422 x 525 mm
Net weight	11 kg	14 kg	19 kg	33 kg	65 kg

INDUSTRY

PREMIUM line

PREMIUM Double grinders

GZ - DD Models with chassis and integrated extraction system

Facts that impress in terms of quality, performance and price

- **10-year Optimum guarantee***
- Heavy industrial grinding machine absorbs the vibrations, which are low anyway, thanks to its high deadweight
- Also suitable for strong thrust force on the grinding wheels
- Maintenance-free, durable, induction motor with smooth action
- Cast iron housing
- Spark guard
- Sturdy, adjustable workpiece support
- Grinding wheels not included in standard scope of delivery

GZ-D models:

- without chassis (chassis available as option)

GZ-DD models:

- Integrated extraction system with aluminium fan and self-cleaning impellers
- Dust bag made of self-extinguishing woven material
- Sturdy chassis with water tray







Fig.: GZ 25DD with optional grinding wheels

Vario conversion see page 304

Accessories	Article no.
Electronic brake	3091099
› Controlled braking	
› Including factory assembly	



Accessories

For machine chassis, see page 306
For grinding wheels, see page 310

Model	GZ 20D	GZ 25D	GZ 30D
Article no.	3091010	3091015	3091020
Model	**GZ 20DD**	**GZ 25DD**	**GZ 30DD**
Article no.	3091040	3091045	3091050

Technical data			
Electrical connection	400 V/3 Ph ~50 Hz	400 V/3 Ph ~50 Hz	400 V/3 Ph ~50 Hz
Motor output	750 W	1.1 kW	1.8 kW
Grinding wheel dimensions	Ø 200 x 25 mm	Ø 250 x 30 mm	Ø 300 x 35 mm
Shaft diameter	Ø 20 mm	Ø 25 mm	Ø 30 mm
Rotational speeds	2 800 rpm	1 400 rpm	1 400 rpm
Dimensions L x W x H GZ models	550 x 290 x 360 mm	670 x 340 x 410 mm	810 x 420 x 560 mm
Dimensions L x W x H GZ-DD models	800 x 710 x 1,120 mm	800 x 710 x 1 300 mm	810 x 1,200 x 1,320 mm
Net weight GZ/GZ-DD models	25 kg / 63.7 kg	44.8 kg / 91 kg	64.5 kg / 124 kg

OPTIgrind® GZ 40D

NEW

INDUSTRY

PREMIUM line

PREMIUM Industrial - double grinder, extremely robust and stable

Facts that impress in terms of quality, performance and price

- **10-year Optimum guarantee***
- Suitable for continuous and intensive use in industry
- Heavy industrial grinding machine absorbs the vibrations, which are low anyway, thanks to its high deadweight
- Also suitable for strong thrust force on the grinding wheels
- Maintenance-free, durable, induction motor with smooth action
- Cast iron housing
- Spark guard
- Stable, displaceable workpiece support
- Grinding wheels not included in standard scope of delivery

BENCH GRINDERS



Fig.: Showing optional grinding wheels and GU4-H chassis

Material support



› Displaceable
› Sturdy

Extraction port

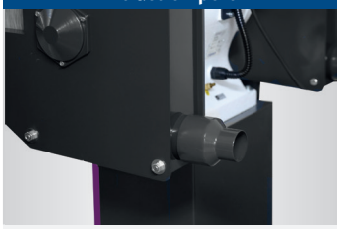

› Nominal width Ø 90 mm

Control unit



› With emergency stop push button



Model	GZ40D
Article no.	3091025
Technical data	
Electrical connection	400 V/3 Ph ~50 Hz
Motor output	4.4 kW
Grinding wheels	
Dimensions	Ø 400 x 50 mm bore Ø 40 mm
Rotational speeds	1 400 rpm
Extraction duct nominal width	Ø 90 mm
Dimensions and weight	
Length x width x height	980 x 600 x 660 mm
Net weight	168 kg

Vario conversion see page 303

For grinding wheels, see page 310

Machine mobile base	Article no.
GU 5-H with cyclone extraction unit	3107114
GU 4-H	3107119

For information, see page 308

COMBINED AND UNIVERSAL GRINDERS

UNIVERSAL
COMBINED GRINDERS
BRUSH DEBURRER



NEW

TRADES

Functional universal grinding machines with grinding attachment

Facts that impress in terms of quality, performance and price

- Rugged and sturdy universal grinding machines with grinding belt and grinding wheel for a variety of materials
- Heavy, durable industrial design with maintenance-free motor for continuous use
- Large, heavy fastening flanges ensure excellent disc concentricity
- Grinding attachment with graphite support; prevents friction and heat
- Stop allows for fast and convenient initial grinding of the workpieces
- Belt run adjustment without tools - adjustable using a single star knob
- Universal corundum grinding wheel and grinding belt included in standard scope of delivery

Grinding

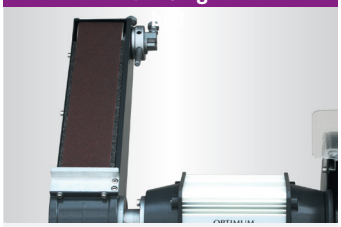

› Grinding attachment can be adjusted via the flange in a swivel range of 0°-90°

Grinding



› Sturdy workpiece support surface
› Adjustable spark protection

UNIVERSAL GRINDERS



Fig.: GU 30S

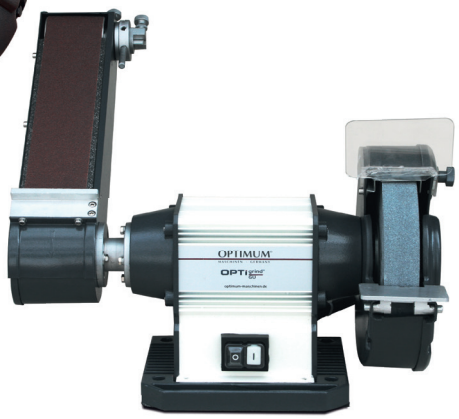

Fig.: GU 20S

Model	GU 20S	GU 25S	GU 30S
Article no. (230 V)	3101570	-	-
Article no. (400 V)	3101575	3101580	3101585
Technical data			
Electrical connection	230 V or 400 V	400 V/3 Ph ~50 Hz	400 V/3 Ph ~50 Hz
Motor output	600 W	1.5 KW	2.2 kW
Grinding wheel size	Ø 200 x 30 mm	Ø 250 x 40 mm	Ø 300 x 50 mm
Shaft seating	Ø 16 mm	Ø 20 mm	Ø 25 mm
Extraction port	Ø 32 mm	Ø 32 mm	Ø 35 / Ø 50 mm
Grinding belt length, width	75 x 762 mm	75 x 1 016 mm	100 x 1,190 mm
Dimensions L x W x H	501 x 261 x 459 mm	514 x 319 x 596 mm	767 x 420 x 527 mm
Net weight	20.7 kg	31.5 kg	64.5 kg

Contents of package

› Grinding wheel normal corundum fine 80 grain
› Grinding belt normal corundum fine 80 grain

Vario conversion see page 302

Accessories

For chassis see page 306
For buffing discs see page 310

NEW

TRADES

OPTIMUM® MASCHINEN - GERMANY

Effective brush deburrer for trades and small series

Facts that impress in terms of quality, performance and price

- Heavy, durable industrial design with maintenance-free motor
- Long service life and quiet action thanks to balanced rotor with quality ball bearings
- For deburring pipes, sections and flat workpieces made of metal
- Tray for safety glasses
- Sturdy and stable machine body
- Safe and clean working with the optional GU 1 chassis with cyclone dust extraction

BRUSH DEBURRER



Dimensions

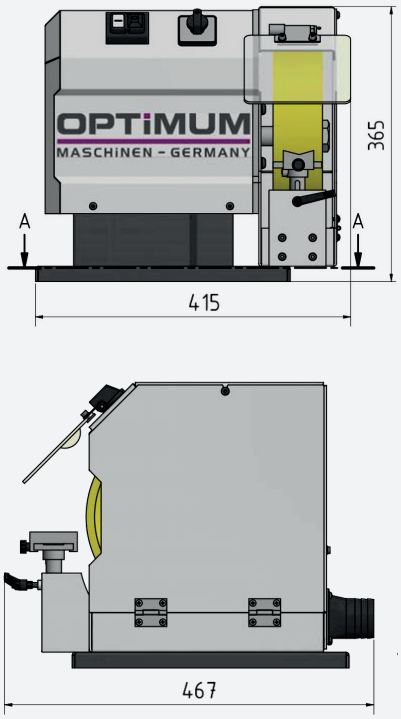

Material sup-



› Height-adjustable
› Holder also for round material

Extraction duct



› The extraction connection outer diameter is 50 mm



Model	GB 250B
Article no.	3101670
Technical data	
Electrical connection	400 V/3 Ph ~50 Hz
Motor output	1.3 / 1.8 kW
Round brush	
Dimensions of round brush	Ø 250 x 40 mm
Shaft seating	Ø 24 mm
Extraction port	Ø 50 mm
Circumferential speed of round brush	37.3 m/s at 2 850 rpm
Rotational speed	1 450 / 2 850 rpm
Dimensions and weight	
Length x width x height	415 x 467 x 356 mm
Net weight	36 kg

Contents of package

› Round brush, wire thickness 0.35 mm

Chassis	Article no.
GU 1 - 400 V with extraction unit	3107109
GU 4	3107119

Information on machine chassis, see page 307

Extraction hose	3107111
2 flexible extraction tubes	

Round brush steel wire	Article no.
Ø 250 x 42-47 mm with 25 mm adapter	
Wire thickness: **0.20 mm**	3107451
Wire thickness: **0.30 mm**	3107452

TRADES

Combined grinding machines by Optimum for workshops

Facts that impress in terms of quality, performance and price

- Durable design with maintenance-free motor for continuous use
- Housing made of strand cast aluminium
- Large, heavy fastening flanges ensure excellent disc concentricity
- Grinding attachment with graphite support - prevents friction and heat
- Stop allows for fast and convenient initial grinding of the workpieces
- Swivelling brush protection housing
- Extraction duct for attaching an extraction unit
- One grinding wheel and one multi-purpose brush included in scope of delivery

Material support



› Mobile and sturdy

Multi-purpose brush



› in swivelling brush housing
› High tensile steel wire
› with extraction duct

COMBINED GRINDERS



Contents of package

› Grinding wheel - normal corundum coarse 36 grain
› Multi-purpose wire brush, wire thickness 0.3 mm

Accessories

For machine chassis, see page 306
For grinding wheels and multi-purpose brushes, see page 310

Model	GU 15B	GU 18B	GU 20B	GU 25B
Article no. (230 V)	3101600	3101605	3101610	-
Article no. (400 V)	-	-	3101615	3101620
Technical data				
Electrical connection	230 V/1 Ph ~50 Hz	230 V/1 Ph ~50 Hz	230 V / 400 V	400 V/3 Ph ~50 Hz
Motor output	450 W	450 W	600 W	1.5 kW
Grinding disk dimensions	Ø 150 x 20 mm	Ø 175 x 25 mm	Ø 200 x 30 mm	Ø 250 x 40 mm
Multi-purpose wire brush	Ø 150 x 20 mm	Ø 175 x 25 mm	Ø 200 x 25 mm	Ø 250 x 30 mm
Shaft seating	Ø 16 mm	Ø 32 mm	Ø 32 mm	Ø 32 mm
Rotational speeds	2 850 rpm	2 850 rpm	2 850 rpm	2 850 rpm
Extraction duct	Ø 34- 35 mm	Ø 34- 35 mm	Ø 34- 35 mm	Ø 34- 35 mm
Dimensions L x W x H	428 x 305 x 230 mm	428 x 305 x 244 mm	517 x 345 x 282 mm	526 x 380 x 319 mm
Net weight	10.7 kg	12.3 kg	18.5 kg	32.5 kg

INDUSTRY

PREMIUM Combined grinding machines for workshops, steel construction companies.

GZ - CD Models with chassis and integrated extraction system

Facts that impress in terms of quality, performance and price

- **10-year Optimum guarantee***
- Heavy industrial combined grinding machine absorbs the vibrations, which are low anyway, thanks to its high deadweight
- Also suitable for strong thrust force on the grinding wheel and brush
- Maintenance-free, durable, induction motor with smooth action
- Cast iron housing
- Sturdy, adjustable workpiece support
- Grinding wheel and brush not included in standard scope of delivery

PREMIUM line

COMBINED GRINDERS





Fig.: Chassis of CD machines with integrated extraction system

Extraction system



GZ - CD models
› Made in Italy
› Perfectly aligned to avoid noise and vibrations
› self-cleaning wings

Dust collection bag

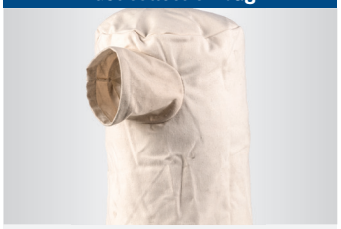

GZ - CD models
› For a clean workplace
› More safety - collects glowing chips in a sack

Multi-purpose brush



› with swivelling brush housing
› High tensile steel wire

Model	GZ 20C	GZ 25C
Article no.	3091070	3091075
Model	**GZ 20CD**	**GZ 25CD**
Article no.	3091080	3091085

Technical data		
Electrical connection	400 V/3 Ph ~50 Hz	400 V/3 Ph ~50 Hz
Motor output	750 W	1.1 kW
Grinding wheel dimensions	Ø 200 x 25 mm	Ø 250 x 30 mm
Round brush dimensions	Ø 200 x 25 mm	Ø 250 x 25mm
Shaft seating	Ø 20 mm	Ø 25 mm
Rotational speeds	2 800 rpm	1 400 rpm
Dimensions L x W x H GZ-C	650 x 300 x 360 mm	850 x 340 x 410 mm
Dimensions L x W x H GZ-CD	900 x 710 x 1 300 mm	850 x 1 200 x 1 300 mm
Net weight GZ-C / GZ-CD	26.5 kg / 65 kg	47.9 kg / 87 kg

Accessories	Article no.
Electronic brake	3091099
› Controlled braking	
› Including factory assembly	



Vario conversion see page 302

For grinding wheels and multi-purpose brushes see page 310

Chassis	Article no.
GZ 20D	3091120
GZ 25D	3091122

For information, see page 306

OPTIgrind® GZ 40C

NEW

INDUSTRY

PREMIUM line

PREMIUM combined grinding machine - a powerful industrial grinder with multi-purpose brush and grinding wheel

Facts that impress in terms of quality, performance and price

- **10-year Optimum guarantee***
- Suitable for continuous and intensive use in industry
- Heavy-duty combined grinding machine absorbs the vibrations thanks to its high deadweight
- Also suitable for strong thrust force on the grinding wheel and brush
- Maintenance-free, durable, induction motor with smooth action
- Cast iron housing
- Swivelling brush protection housing with extraction ducts
- Sturdy, adjustable workpiece support
- Grinding wheel and brush not included in standard scope of delivery



Fig.: Showing optional grinding wheel, brush, and GU4-H chassis

Material support



› Mobile and sturdy

Multi-purpose brush



› with swivelling brush housing
› Optionally available multi-purpose brush made of high tensile steel wire

Rotational speed



› constant speed, also under load

COMBINED GRINDERS

Model	GZ 40C
Article no.	3091079
Technical data	
Electrical connection	400 V/3 Ph ~50 Hz
Motor output	4.4 kW
Grinding wheel dimensions	Ø 400 x 50 mm
Shaft seating grinding wheel	Ø 40 mm
Round brush dimensions	Ø 350 x 35 mm
Shaft seating round brush	Ø 25 mm
Rotational speeds	1 400 rpm
Extraction duct nominal width	Ø 90 mm
Dimensions length x width x height	1 200 x 660 x 580 mm
Net weight	144 kg

For grinding wheels and multi-purpose brushes see page 310

Chassis	Article no.
GU 5-H with extraction unit (cyclone)	3107124
GU 4-H	3107123
For information, see „Machine bases“ on page 307	

Machine chassis and conversion of machine to **Vario**	Article no.
Including machine chassis	
without machine - must be ordered separately	
GU4-H machine chassis	3491571
GU5-H machine chassis with cyclone extraction unit	3491573
For information, see page 302	

GRINDING/POLISHING MACHINE



TRADES

Polishing machine for surface machining of metal workpieces

Facts that impress in terms of quality, performance and price

- Heavy, durable industrial design with maintenance-free motor
- Housing made of strand cast aluminium
- Long service life and quiet action thanks to balanced rotor with quality ball bearings
- Two wide polishing discs included in standard scope of delivery
- Vibration-damping rubber feet (without extraction hood - can be ordered as an option)



Fig.: Vario conversion
Chassis with view window
(not available)

POLISHING MACHINE



Fig.: GU 20P

NEW

Extraction hood set	Article no.
For GU 20P	3107060
For GU 25P	3107061
› 2-part (left and right)	
› For use of an extraction unit	

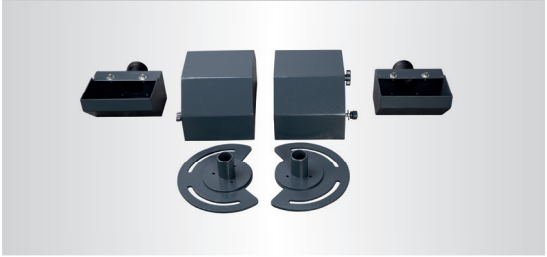

Model	GU 20P	GU 25P
Article no. (230 V)	3101540	-
Article no. (400 V)	3101545	3101550

Technical data		
Electrical connection	230 V or 400 V	400 V/3 Ph ~50 Hz
Motor output	600 W	1.5 kW
Rotational speed	2 850 rpm	2 850 rpm
Polishing disc size	Ø 200 x 20 mm	Ø 250 x 25 mm
Shaft seating	Ø 16 mm	Ø 20 mm
Dimensions L x W x H	545 x 200 x 262 mm	555 x 250 x 296 mm
Net weight	10.6 kg	17.4 kg

Contents of package

› 2 buffing discs

Vario conversion see page 300

Accessories

For chassis, see page 306
For buffing discs, see page 310

NEW

TRADES

OPTIMUM® MASCHINEN - GERMANY

Polishing machine for surface machining of metal work-pieces

Facts that impress in terms of quality, performance and price

- Heavy, durable industrial design with maintenance-free motor
- Housing made of strand cast aluminium
- Long service life and quiet action thanks to balanced rotor with quality ball bearings
- Two wide polishing discs included in standard scope of delivery
- Vibration-damping rubber feet, base plate
- Extraction hood for use of an extraction unit

Dimensions

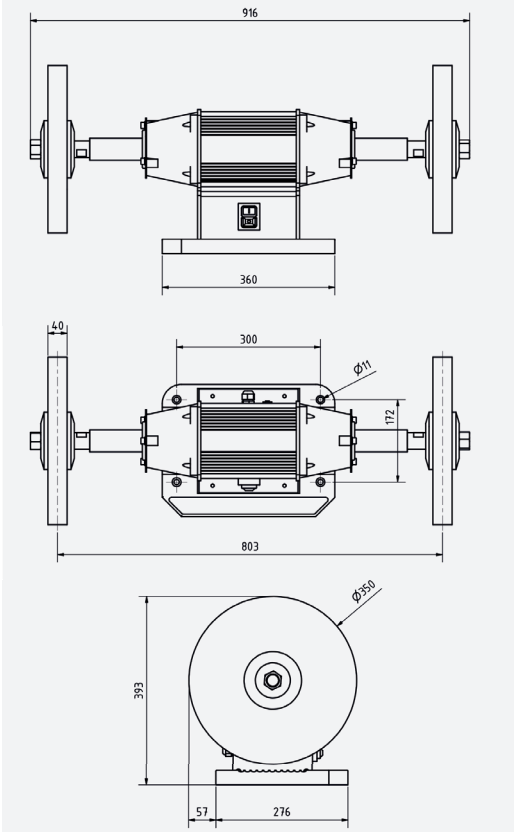

POLISHING MACHINE



Model	GU 35P
Article no. (230 V)	-
Article no. (400 V)	3101560

Technical data	
Electrical connection	400 V/3 Ph ~50 Hz
Motor output	2.2 kW
Rotational speed	1 450 rpm
Polishing disc size	Ø 350 x 30 mm
Shaft seating	Ø 25 mm
Dimensions L x W x H	1,017 x 420 x 527 mm
Net weight	64.1 kg

Contents of package

› 2 buffing discs

Vario conversion see page 300

Accessories

For chassis, see page 306
For buffing discs, see page 310

INDUSTRY

PREMIUM line

PREMIUM Buffing grinder - a powerful industrial machine

Facts that impress in terms of quality, performance and price

- **10-year Optimum guarantee***
- Suitable for continuous and intensive use in industry
- Heavy-duty buffing grinder absorbs the vibrations (which are low anyway) thanks to its high deadweight
- Maintenance-free, durable, induction motor with smooth action
- Cast iron housing
- Polishing discs not included in standard scope of supply

POLISHING MACHINE



Fig: With optional polishing discs and GU4-H chassis

Safety enclosure



› swivelling
› Extraction duct for attaching an extraction unit

Control unit



› With emergency stop push button

Housing



› Made of cast iron
› Very high damping capacity

Model	GZ 40P
Article no.	3091130

Technical data	
Electrical connection	400 V/3 Ph ~50 Hz
Motor output	4.4 kW
Grinding wheel dimensions	350 x 30 mm
Shaft seating	Ø 25 mm
Rotational speeds	1 400 rpm
Extraction duct nominal width	Ø 90 mm
Dimensions L x W x H	1 390 x 530 x 580 mm
Net weight	110 kg

Vario conversion see page 302

For buffing discs, see page 310

Chassis	Article no.
GU 5-H with extraction unit (cyclone)	3107114
GU 4-H	3107123

For information, see „Machine bases“ on page 307

VARIO DRIVES



Machine	20			25			30		35	40
Bench grinders	GU 20	GZ 20D	GZ 20DD	GU 25	GZ 25D	GZ 25DD	GU 30	GZ 30D		GZ 40D
Universal grinders	GU 20S			GU 25S			GU 30S			
Combined grinders	GU 20B	GZ 20C	GZ 20CD	GU 25B	GZ 25C	GZ 25CD		GZ 30C		GZ 40C
Buffing grinders	GU 20P			GU 25P					GU 35P	GZ 40P
Vario drive										
GU 1 with cyclone extraction unit				●						
GU 3				●						
GU 4							●		●	
GU 4-H										●
GU 5 with cyclone extraction unit							●		●	
GU 5-H with cyclone extraction unit										●
GZ		●	●		●	●		●		

Vario drive with GU 1 machine chassis enables continuously variable control of the grinder's speed

Vario drive with SIEMENS Sinamics V20 inverter drive

› Wider voltage range, advanced cooling and painted electronic components increase the robustness of the inverter
› Stable operation even with difficult grid conditions



Vario chassis with GU 1 machine chassis with cyclone extraction unit
› **Without grinder** - must be ordered separately along with your order.
› Sturdy chassis
› Cyclone extraction unit integrated in chassis, consequently less space required
› Noise-insulated



Automatic start-up

No need to additionally switch the extraction unit on or off because the extraction unit switches on or off automatically after a delay of 2-3 seconds when the unit is switched on or off. The residual dust is extracted after switching off the machine in line with the Hazardous Materials Ordinance

Vario conversion with GU 1 machine chassis	
Motor output up to 0.75 kW	
Article no.	3491510
Circumferential speeds 30 m/s to 5 m/s controllable	

Machines required	
› Double grinder **GU 20**	3101520
› Combined grinding machine **GU 20B**	3101615
› Polishing grinder **GU 20P**	3101545
› Universal grinding machine **GU 20S**	3101575

Vario conversion with GU 1 machine chassis	
Motor output up to 1.5 kW	
Article no.	3491530
Circumferential speeds 37 m/s to 6 m/s controllable	

Machines required	
› Double grinder **GU 25**	3101525
› Combined grinding machine **GU 25B**	3101620
› Polishing grinder **GU 25P**	3101550
› Universal grinding machine **GU 25S**	3101580

More information on „Machine bases“ on page 307

The Vario conversion complies with the DIN EN 55011 standard: class C2 Note: The extraction unit requires a neutral conductor, 400-V version

Vario drive with GU 3 machine chassis enables continuously variable control of the grinder's speed

Vario drive with SIEMENS Sinamics V20 inverter drive

› Wider voltage range, advanced cooling and painted electronic components increase the robustness of the inverter
› Stable operation even with difficult grid conditions



Vario conversion with GU 3 machine chassis
› **Without grinder** - must be ordered separately along with your order.
› Coolant tray
› Small footprint



Fig.: Chassis with sample view window

Vario conversion with GU 3 machine chassis	
Motor output up to 0.75 kW	
Article no.	3491511
Circumferential speeds 30 m/s to 5 m/s controllable	

Machines required	
› Double grinder **GU 20**	3101520
› Combined grinding machine **GU 20B**	3101615
› Polishing grinder **GU 20P**	3101545
› Universal grinding machine **GU 20S**	3101575

Vario conversion with GU 3 machine chassis	
Motor output up to 1.5 kW	
Article no.	3491531
Circumferential speeds 37 m/s to 6 m/s controllable	

Machines required	
› Double grinder **GU 25**	3101525
› Combined grinding machine **GU 25B**	3101620
› Polishing grinder **GU 25P**	3101550
› Universal grinding machine **GU 25S**	3101580

More information on „Machine bases“ on page 307

Vario drive optionally with machine chassis GU 4 or GU 5
enables continuously adjustable grinding machine speed control

Vario drive with SIEMENS Sinamics V20 inverter drive
- Wider voltage range, advanced cooling and painted electronic components increase the robustness of the inverter
- Stable operation even with difficult grid conditions



GU 4



Machine mobile base & Machine = Vario

GU 5



Machines required	
Double grinder **GU 30**	3101530
Combined grinding machine **GU 30S**	3101585
Polishing grinder **GU 35P**	3101560

Vario conversion with GU 4 machine chassis without extraction unit	
Motor output up to 2.2 kW	
Article no.	3491550

- **Without grinder** - must be ordered separately along with your order.
- Circumferential speeds 34 m/s to 6 m/s controllable
- Coolant tray
- Small footprint

Vario conversion with GU 5 machine chassis with cyclone extraction unit	
Motor output up to 2.2 kW	
Article no.	3491552

- **Without grinder** - must be ordered separately along with your order.
- Circumferential speeds 34 m/s to 6 m/s controllable
- Sturdy chassis
- Cyclone extraction unit integrated in chassis, consequently less space required
- Noise-insulated

Automatic start-up
No need to additionally switch the extraction unit on or off because the extraction unit switches on or off automatically after a delay of 2-3 seconds when the unit is switched on or off. The residual dust is extracted after switching off the machine in line with the Hazardous Materials Ordinance

For more information on machine chassis, see page 308

Vario drive with GU 4-H or GU 5-H machine chassis enables continuously variable control of the grinder's speed

Vario drive with SIEMENS Sinamics V20 inverter drive

› Wider voltage range, advanced cooling and painted electronic components increase the robustness of the inverter
› Stable operation even with difficult grid conditions



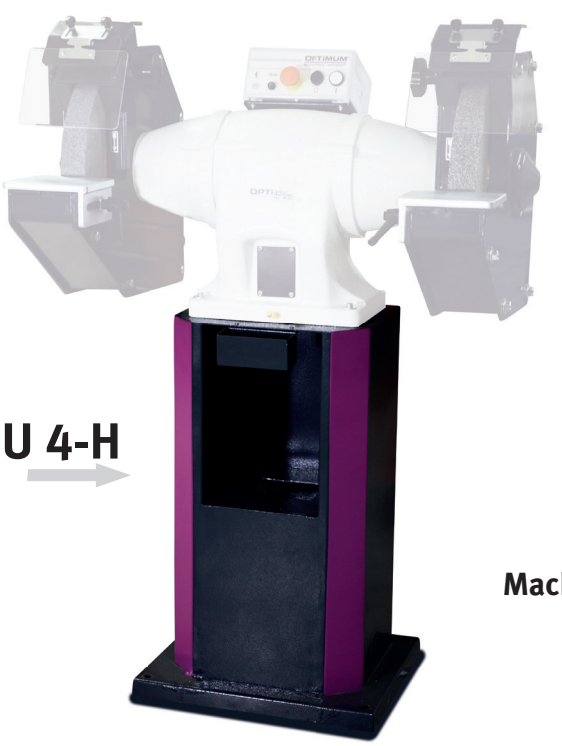

GU 4-H

Machine mobile base & Machine = Vario



GU 5-H

Machines required	
› Double grinder **GZ40D**	3091025
› Combined grinder **GZ 40C**	3091079
› Polishing grinder **GU 40P**	3091130

Vario conversion with GU 4-H machine chassis Without extraction unit	
Motor output up to 4.4 kW	
Article no.	3491571

› **Without grinder** - must be ordered separately along with your order.
› Circumferential speeds 34 m/s to 6 m/s controllable
› Coolant tray
› Small footprint

Vario conversion with GU 5-H machine chassis with cyclone extraction unit	
Motor output up to 4.4 kW	
Article no.	3491573

› **Without grinder** - must be ordered separately along with your order.
› Circumferential speeds 34 m/s to 6 m/s controllable
› Sturdy chassis
› Cyclone extraction unit integrated in chassis, consequently less space required
› Noise-insulated

Note: The chassis must be filled with concrete by the customer.

Automatic start-up
No need to additionally switch the extraction unit on or off because the extraction unit switches on or off automatically after a delay of 2-3 seconds when the unit is switched on or off. The residual dust is extracted after switching off the machine in line with the Hazardous Materials Ordinance

For more information on machine chassis, see page 308

Vario drive with machine chassis with or without extraction unit
enables continuously adjustable grinding machine speed control

Vario drive with SIEMENS Sinamics V20 inverter drive
- Wider voltage range, advanced cooling and painted electronic components increase the robustness of the inverter
- Stable operation even with difficult grid conditions





Fig.: GZ 25D

Vario conversion with GZ machine chassis Without extraction unit	
Motor output up to 0.75 kW	
Article no.	3491513

- **Without grinder** - must be ordered separately along with your order.
- **Includes chassis** (without extraction unit)
- Circumferential speeds 30 m/s to 5 m/s controllable

Machines required	
Double grinder **GZ 20D**	3091010
Universal grinder **GZ 20C**	3091070

Vario conversion with GZ machine chassis Without extraction unit	
Motor output up to 1.1 kW	
Article no.	3491530

- **Without grinder** - must be ordered separately along with your order.
- **Includes chassis** (without extraction unit)
- Circumferential speeds 19 m/s to 3 m/s controllable

Machines required	
Double grinder **GZ 25D**	3091015
Universal grinder **GZ 25C**	3091075



Fig.: GZ 25DD

Vario conversion GZ with cyclone extraction unit	
Motor output up to 0.75 kW	
Article no.	3491514

- Chassis (scope of delivery) is converted to Vario
- Circumferential speeds 30 m/s to 5 m/s controllable

Machines required with chassis	
Double grinder **GZ 20D**D	3091040
Universal grinder **GZ 20C**D	3091080

Vario conversion GZ with cyclone extraction unit	
Motor output up to 1.1 kW	
Article no.	3491534

- Chassis (scope of delivery) is converted to Vario
- Circumferential speeds 19 m/s to 3 m/s controllable

Machines required with chassis	
Double grinder **GZ 25DD**	3091045
Universal grinder **GZ 25C**D	3091085

For more information on machine chassis, see page 306

OPTIMUM®
MASCHINEN - GERMANY

MACHINE BASES







Machine													
Belt sanders	GB 100S	GBS 75	GBS 150										
Brush deburrer				GB 250B									
Plate grinding machine				GB 305D									
Bench grinders					GU 15	GU 18	GU 20	GZ 20D	GU 25	GZ 25D	GU 30	GZ 30D	GZ 40D
Universal grinders							GU 20S		GU 25S		GU 30S		
Combined grinders					GU 15B	GU 18B	GU 20B	GZ 20C	GU 25B	GZ 25C		GZ 25C	GZ 40C
Buffing grinders							GU 20P		GU 25P		GU 35P		GZ 40P
Matching chassis													
Wall holder					●	●	●		●				
GZ								●		●		●	
GU 1 with extraction unit				●	●	●	●		●				
GU 2 with extraction unit	●	●	●										
GU 3					●	●	●		●				
GU 4				●							●		
GU 4-H													●
GU 5 with extraction unit											●		
GU 5-H with extraction unit													●

GU 3 - Machine chassis with cyclone extraction unit for grinding machines

Facts that impress in terms of quality, performance and price

- ▶ Coolant tray
- ▶ Small footprint
- ▶ Specially suited for our machines
  - › Bench grinders GU 15 - GU 25
  - › Universal grinding machines GU 20S and 25S
  - › Combined sander GU 15B - GU 25B
  - › Polishing machines GU 20P and GU 25P



Dimensions and bores

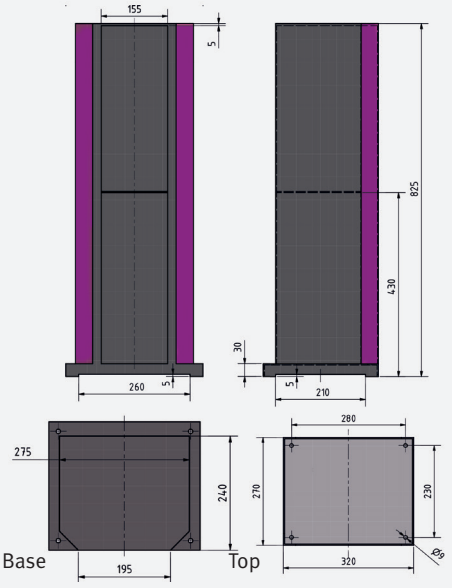

Model	GU 3
Article no.	3107118
Dimensions L x W x H	320 x 270 x 825 mm
Net weight	14.5 kg

Machine chassis for GZ grinding machines

Facts that impress in terms of quality, performance and price

- ▶ Sturdy
- ▶ Small footprint
- ▶ Specially suited for our machines
  - › Bench grinders GZ 20 - GZ 30
  - › Combined sanders GZ 20C - GZ 25C



Model - matches	GZ 20	GZ 25	GZ 30
Article no.	3091120	3091122	3091124
Dimensions L x W x H	400 x 370 x 760 mm	437 x 437 x 675 mm	460 x 430 x 760 mm
Net weight	33 kg	40 kg	52 kg

Wall holder

Facts that impress in terms of quality, performance and price

- ▶ Coolant tray
- ▶ L x W x H: 332 x 300 x 230 mm
- ▶ Specially suited for our machines
  - › Bench grinders GU 15 - GU 25
  - › Universal grinding machines GU 20S and 25S
  - › Combined sander GU 15B - GU 25B
  - › Polishing machines GU 20P and GU 25P



Dimensions

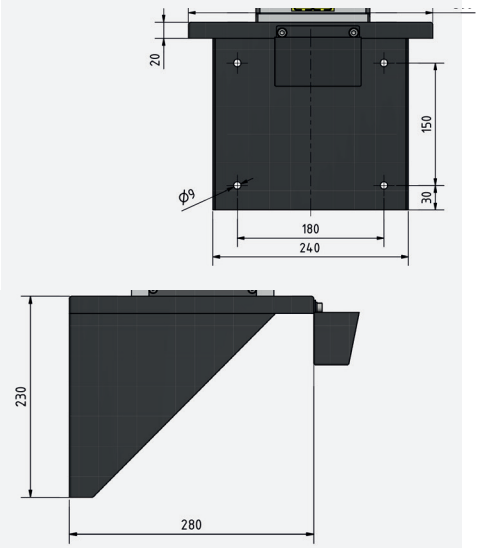

Model	Wall holder
Article no.	3107050

GU 1 - Machine chassis with cyclone extraction unit for grinding machines

Facts that impress in terms of quality, performance and price

- Sturdy chassis
- Cyclone extraction unit integrated in chassis, consequently less space required
- For GU and GU-S machines
- Noise-insulated
- Without drilled holes - must be drilled individually
- Y adapter for two-pipe extraction unit connection each with Ø 50 mm



Lamp holder
- prepared for machine lamp LED 3-500





Fig. shows sample application

Dimensions

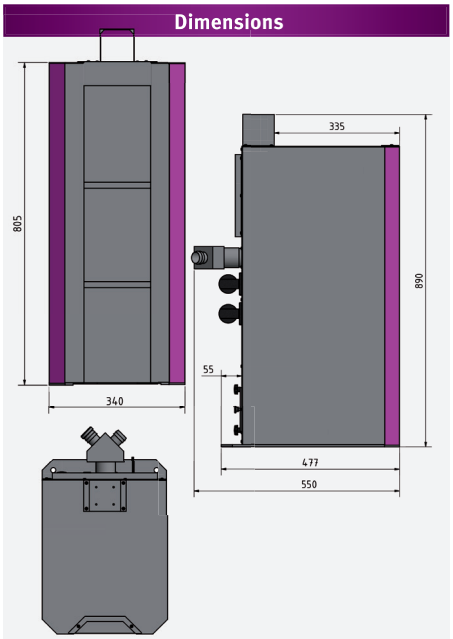

Model	GU 1	
Article no.	3107110	3107109
Electrical connection	230 V/1 Ph	400 V/3 Ph
Motor output	1.3 kW	
Rotational speed	29 000 rpm	
Air throughput	2.3 m³ per minute	
Dimensions L x W x H	477 (550) x 340 x 805 (890) mm	
Net weight	42 kg	

Note: The extraction unit needs a neutral conductor, 400-V version

Extraction hose	3107111
› 2 flexible extraction pipes	
› for GU and GU-S grinders	
› Connection with Ø 50 mm and Ø 35 mm	



Automatic start-up GU 1 and GU 2
No need to additionally switch the extraction unit on or off because the extraction unit switches on or off automatically after a delay of 2-3 seconds when the unit is switched on or off. The residual dust is extracted after switching off the machine in line with the Hazardous Materials Ordinance

GU 2 - Machine chassis with cyclone extraction unit

Facts that impress in terms of quality, performance and price

- Cyclone extraction unit with two motors
- Includes Y adapter for two-tube extraction unit connection, 60 x 300-1000 mm flexible
- Small footprint
- Noise-insulated
- External 230V continuous supply
- Specially suited for our belt grinding machines GBS 75 /GBS 150 or external machines



Chip drawer

Dimensions

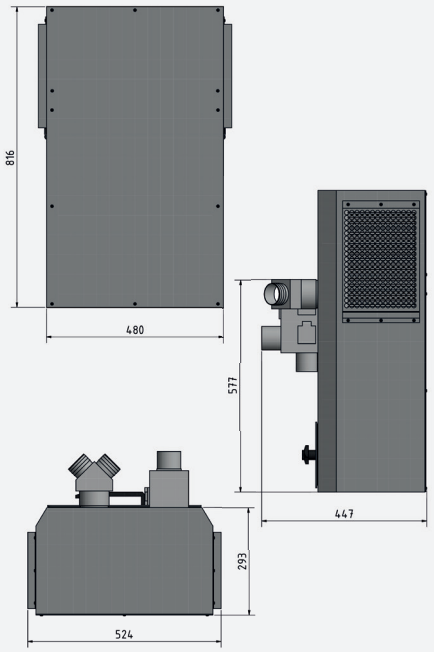

Model	GU 2
Article no.	3107115
Electrical connection	400 V/3 Ph 50Hz
Total connected load	4 kW
Motor output per blower	1.3 kW
Number of blowers	2
Rotational speed	29 000 rpm
Air throughput	4.6 m³ per minute
Chip filter container volume	15 litres
Dimensions L x W x H	525 x 440 x 815 mm
Net weight	60 kg

Extraction hose	3107116
2 units flexible extraction tube Ø 60 mm	
Length 300 - 1000 mm	

The chassis GU 1 and GU 2 comply with the DIN EN 55011 standard: class C2. Note: The extraction unit needs a neutral conductor

GU 4 / GU 4-H - machine chassis for grinding machines GU 4-H for heavy loads

Facts that impress in terms of quality, performance and price

- Coolant tray
- Small footprint
- The GU 4-H chassis must be filled with concrete at the customer's site.
- GU 4 - Specially suited for our machines
  - › Double grinder GU 30
  - › Universal grinding machine GU 30S
  - › Polishing grinder GU 35P
- GU 4-H - Specially suited for our machines
  - › Double grinder GZ 40D
  - › Combined grinder GZ 40C
  - › Polishing grinder GU 40P

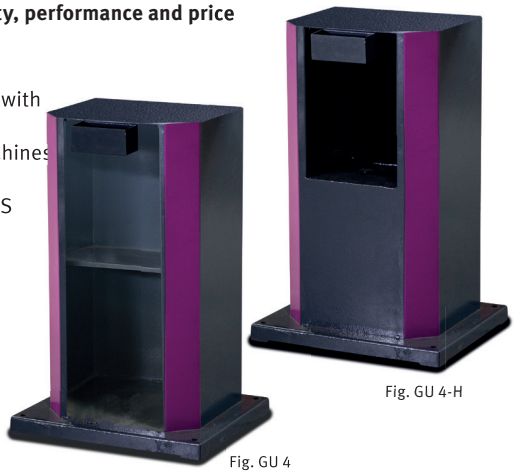

Fig. GU 4-H

Fig. GU 4

*Note: The GU 4-H chassis must be filled with concrete at the customer's site.

Model	GU 4	GU 4-H*
Article no.	3107119	3107123
Dimensions	500 x 420 x 770 mm	500 x 420 x 770 mm
Net weight	30 kg	empty 33 kg / filled 139 kg

Dimensions and bores

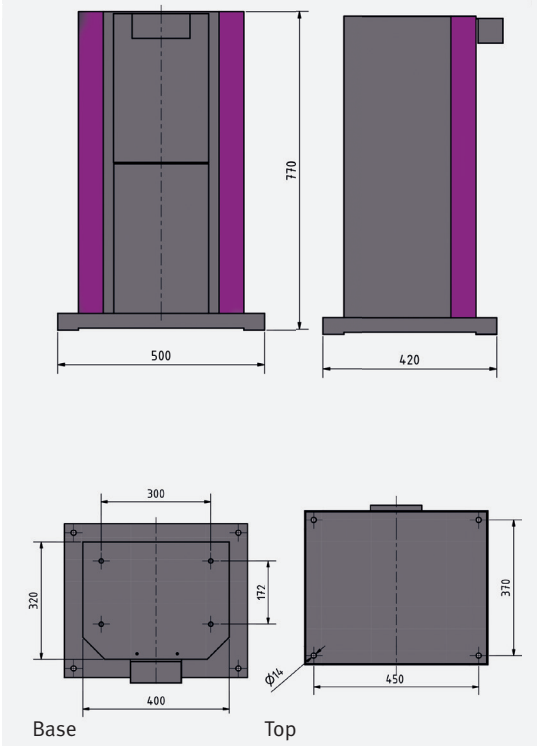

GU 5 / GU 5-H - Universal machine substructure with cyclone extraction unit for grinding machines. GU 5-H for heavy loads

- Sturdy chassis
- Cyclone extraction unit integrated in chassis, consequently less space required
- Noise-insulated
- Without drilled holes - must be drilled individually
- Y adapter for two-tube extraction unit connection
- The GU 5-H chassis must be filled with concrete at the customer's site.
- GU 5 - Specially suited for our machines
  - › Double grinder GU 30
  - › Universal grinding machine GU 30S
  - › Polishing grinder GU 35P
- GU 5-H - Specially suited for our machines
  - › Double grinder GZ 40D
  - › Combined grinder GZ 40C
  - › Polishing grinder GU 40P

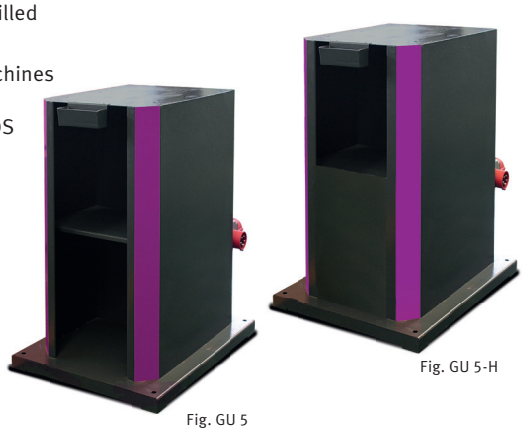

Fig. GU 5-H

Fig. GU 5

*Note: The GU 5-H chassis must be filled with concrete at the customer's site.

Model	GU 5	GU 5-H
Article no.	3107114	3107124
Total connected load	4 kW 400 V/3 Ph	
Speed	29 000 rpm	
Air throughput	2.3 m³ per minute	
Dust tank volume	0.06 m²	
Dimensions L x W x H	744 x 500 x 770 mm	
Net weight	50 kg	empty 53 kg / filled 165 kg

Dimensions and bores

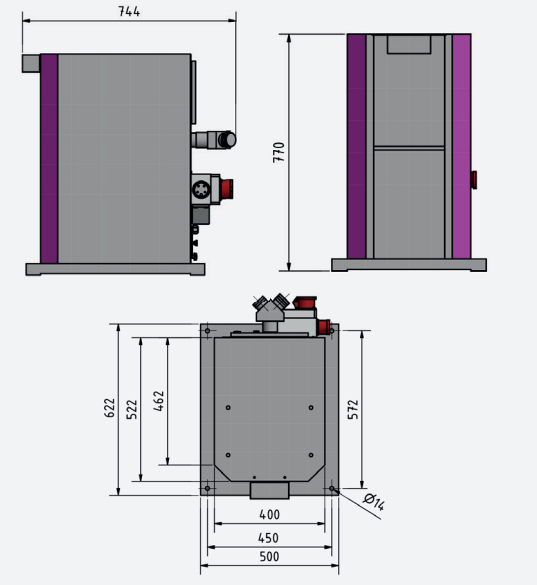

Extraction hose	3107111
› 2 flexible extraction pipes	

Automatic start-up

When the external device is switched on, the extraction unit automatically starts up after a delay of 2-3 seconds. No need to additionally switch the extraction unit on or off: the residual dust is extracted after switching off the machine in line with the Hazardous Materials Ordinance

OPTIMUM®
MASCHINEN - GERMANY

ACCESSORIES FOR GRINDING MACHINES

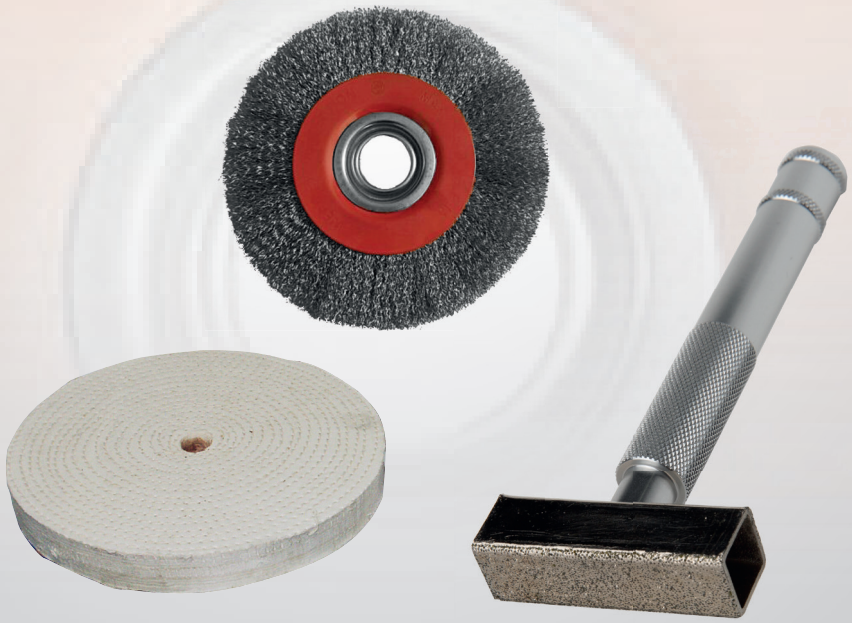

Grinding wheel	Article no.
for GU 15 - GU 30	
› Normal corundum grinding wheel › Rough grain 36	
Ø 150 x 20 shaft seating **Ø 16 mm**	3107150
Ø 175 x 25 shaft seating **Ø 32 mm**	3107180
Ø 200 x 30 shaft seating **Ø 32 mm**	3107210
Ø 250 x 40 shaft seating **Ø 32 mm**	3107250
Ø 300 x 50 shaft seating **Ø 75 mm**	3107270
› Fine grain 80	
Ø 150 x 20 shaft seating **Ø 16 mm**	3107155
Ø 175 x 25 shaft seating **Ø 32 mm**	3107185
Ø 200 x 30 shaft seating **Ø 32 mm**	3107215
Ø 250 x 40 shaft seating **Ø 32 mm**	3107255
Ø 300 x 50 shaft seating **Ø 75 mm**	3107275

for GZ 20 - GZ 40	
› Normal corundum grinding wheel › Hardness M - grey, Made in Italy	
Grinding wheel GZ 20	
K 36	3098121
K 60	3098123
K 80	3098125
Grinding wheel GZ 25	
K 36	3098131
K 60	3098133
K 80	3098135
Grinding wheel GZ 30	
K 36	3098141
K 60	3098143
K 80	3098145
Grinding wheel GZ 40	
› Max. speed 1 650 rpm	
› Dimensions: 400 x 50 mm bore Ø 40 mm	
K 36	3098150
K 60	3098152
K 80	3098154

Polishing disc	Article no.
hard	
Ø 200 x 20 shaft seating **Ø 16 mm**	3107321
Ø 250 x 25 shaft seating **Ø 20 mm**	3107331
Ø 350 x 40 shaft seating **Ø 25 mm**	3107341



soft	
Ø 200 x 20 shaft seating **Ø 16 mm**	3107320
Ø 250 x 25 shaft seating **Ø 20 mm**	3107330
Ø 350 x 40 shaft seating **Ø 25 mm**	3107340

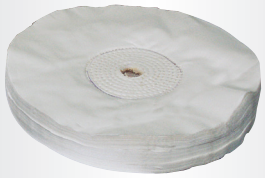

Multi-purpose wire brush	Article no.
for GU 15B / GU 18B / GU 20B / GU 25B	
› Thickness 0.3 mm	
Ø 150 x 20 shaft seating **Ø 16 mm**	3107425
Ø 175 x 20 shaft seating **Ø 32 mm**	3107430
Ø 200 x 20 shaft seating **Ø 32 mm**	3107435
Ø 250 x 20 shaft seating **Ø 32 mm**	3107440
› High tensile steel wire › Made in EU	

GZ 20C/GZ 20CD	
Wire thickness: **0.35 mm**	3098081
Wire thickness: **0.5 mm**	3098082
GZ 25C/GZ 25CD	
Wire thickness **0.3 mm**	3098086
Wire thickness **0.5 mm**	3098087
GZ 40C	
Wire thickness **0.2 mm**	3098092
Wire thickness **0.35 mm**	3098093



Grinding belt	PQ	Article no.
For GU 20S		
Grain size 40	5 units	3357612
Grain size 40	5 units	3357614
Grain size 80	5 units	3357616
Grain size 120	5 units	3357618
Grain size 180	5 units	3357619
Grain size 240	5 units	3357620
For GU 25S		
Grain size 40	5 units	3357682
Grain size 40	5 units	3357684
Grain size 80	5 units	3357686
Grain size 120	5 units	3357688
Grain size 180	5 units	3357689
Grain size 240	5 units	3357690
For GU 30S		
Grain size 40	5 units	3357637
Grain size 40	5 units	3357638
Grain size 80	5 units	3357639
Grain size 120	5 units	3357640

Grinding wheel dresser	3101821
› Diamond	
› Dimensions 45 x 13 mm	



OPTIMUM®
MASCHINEN - GERMANY

SHEET METAL/METALWORKING

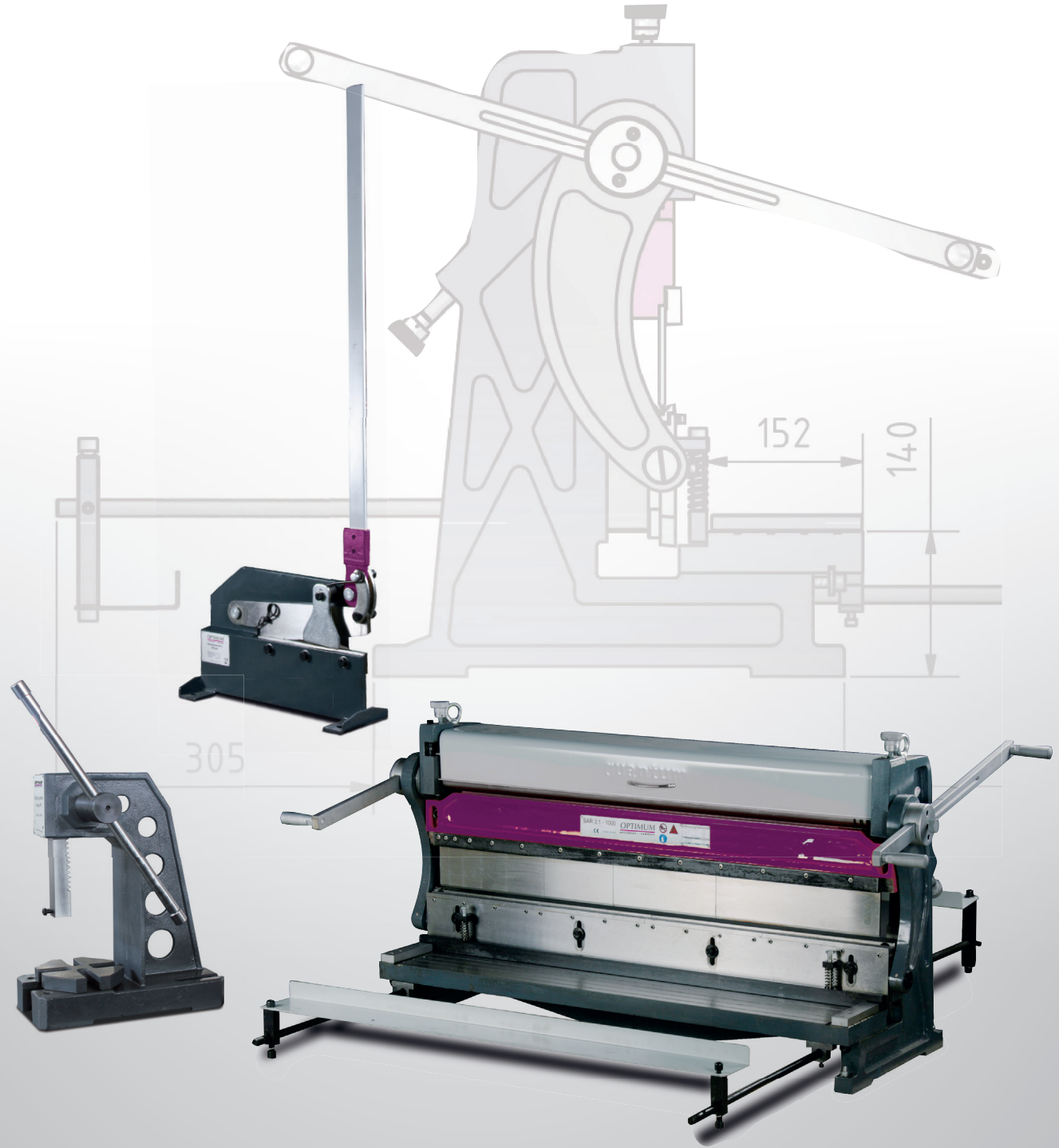

Folding machine FP 30 - universally deployable

Facts that impress in terms of quality, performance and price

- Folding machine FP 30 for bending and folding sheet metals
- Removable bending beam segments
- Convenient swivel movement of the bending beam via lever handle
- Premium quality bending beam
- For use on a vice



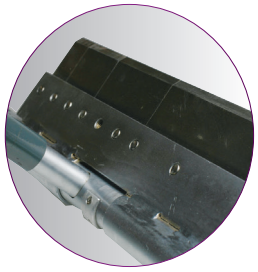

› Bending segment pieces 150 mm/75 mm/50 mm and 25 mm removable

Fig.: Folding machine FP 30

Model	FP 30
Article no.	3244028
Performance features	
Max material width	320 mm
Max. sheet thickness	2.5 mm

Max. folding performance at 90°	
Aluminium/copper	300 x 2 mm
Steel sheet	300 x 1 mm
Net weight	10 kg

Dimensions

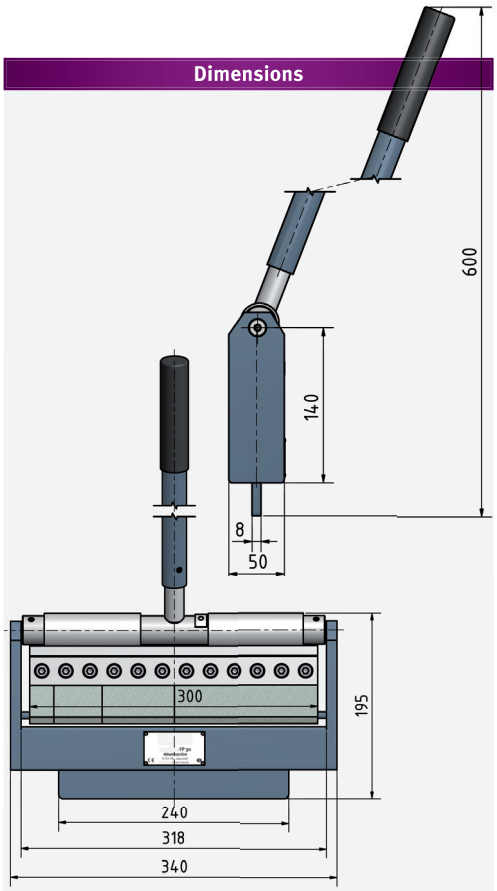

Three-roller roll bending machine BM3 - universally deployable

Facts that impress in terms of quality, performance and price

- Bending and rolling of wires, tubes and sheet
- Polished bending rollers
- Borne steel side frames (self-lubricating)
- Two removable unwinding rollers
- Material thickness and rolling radius separately adjustable
- For use on a vice
- Sturdy support surface

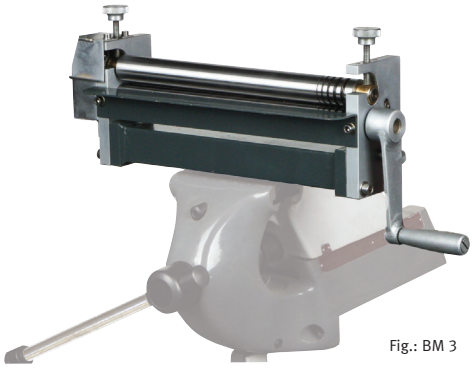



› Wire insert groove Ø 1 - 2 - 3 - 4 - 5 mm

Fig.: BM 3

Model	BM 3
Article no.	3244030
Performance features	
Max material width	310 mm
Bending Ø min.	35 mm
Bending Ø max.	unlimited
Net weight	10 kg

Rolling thickness max.	
Steel sheet St. 37	1 mm
Stainless steel	1 mm
Aluminium/copper	2 mm
Brass	1 mm
Gold/silver/tinplate	2 mm
Narrow widths	3 mm
Round materials	1 - 5 mm
Unwinding roller	Ø 30 mm

Dimensions

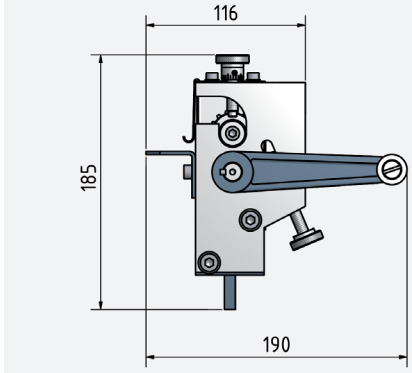

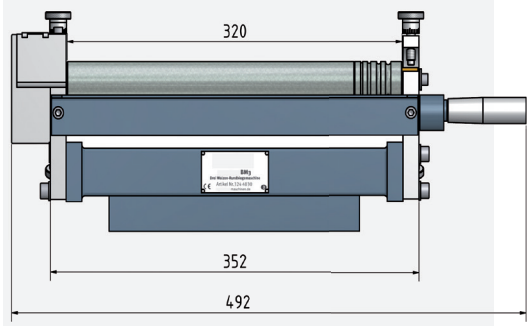

OPTIMUM® MASCHINEN - GERMANY

TRADES

Sheet metal working machine 3 in 1:
Plate rolling, folding, and cutting Ideally suited for demanding users

Facts that impress in terms of quality, performance and price

- Modern design and sturdy steel construction
- High level of design flexibility thanks to segmented folding rail with removable segments
- Operation via two large, adjustable and easily operable levers arranged at the side
- Scissor table with recessed measuring strips and right-angle stop on both sides
- Easily adjustable top, rear and bottom rollers
- Long support surface
- Adjustable rear stop and extensible front material support for safe support of large-format sheet metal



Fig.: SAR 1000

Plate rolling

› Adjusting screws for material thickness with scale

› Ground bending rollers with wire insert grooves on the bottom and front rollers

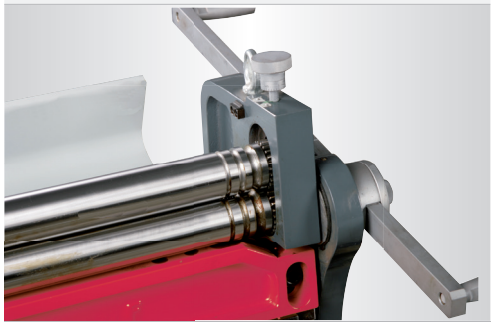

Folding

› Premium folding bars

› Spring hold-down unit

› Segmented folding rail 40 mm/50 mm/65 mm/100 mm/180 mm/255 mm/380 mm for cassette bending

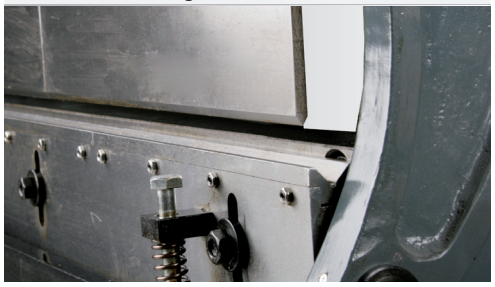

Cutting

› Clean and burr-free cutting thanks to top and bottom blades made of quality grade steel



Contents of package

› Adjustable rear stop

› Front material support

› Tool



Optional accessories
Chassis
› L x W x H: 1 185 x 500 x 700 mm
Art no. 3242107

Model	SAR 1000
Article no.	3242100
Technical data	
Max material width	700 mm
Plate rolling	
Plate rolling min.	Ø 48 mm
Plate rolling max.	Ø unlimited
Steel sheet (S235JR)	up to 1 mm
Stainless steel	up to 0.5 mm
Aluminium/copper	up to 1.5 mm
Brass	up to 1 mm
Gold/silver/tinplate	up to 1.5 mm
Unwinding roller Ø	48 mm
Folding	
Max. sheet thickness	2.5 mm*
Aluminium/copper	up to 1.5 mm
Steel sheet (S235JR)	up to 1 mm
Number of segments	7
Cutting	
Cutting capacity max.	up to 1 mm
Net weight	290 kg

Dimensions

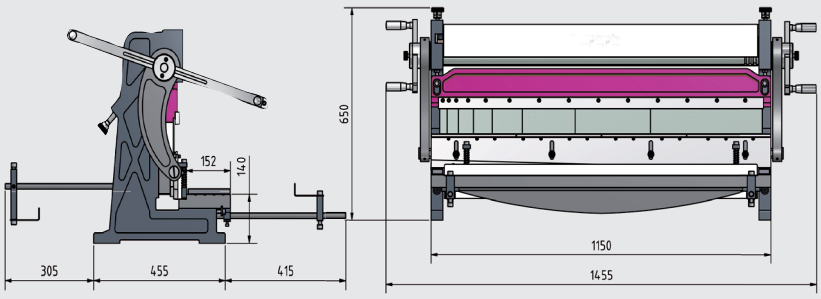

TRADES

Lever-action snips - a quality product for trade applications

Facts that impress in terms of quality, performance and price

- For cutting metal plates, sheet, round and flat steel
- Sturdy snip body
- Good ergonomic cutting geometry
- Easy, strength-saving cutting over the entire length of the cut
- Robust handle ensures a good grip
- Premium blades
- The workpiece to be cut is held down in horizontal position by the hold-down unit
- Stable base and holes drilled for stationary fastening



Fig.: Ps 125

Fig.: Ps 300

Blade



› Premium blade with long service life
› Hold-down unit prevents sheet twisting during cutting
› Strong springs prevent the shears closing autonomously



Model	PS 125	PS 150	PS 300
Article no.	3241006	3241007	3241012
Cutting capacity			
Max. cutting length (b)	95 mm	115 mm	235 mm
Max. sheet thickness (c)	3 mm*	4 mm*	4 mm*
Dimensions L x W x H	245 x 110 x 935 mm	325 x 120 x 960 mm	490 x 155 x 1 340 mm
Net weight	8.7 kg	10.7 kg	23 kg

*Not over the entire length - material steel (S235JR), stainless steel up to 1 mm

Replacement blade set	Article no.
› 2-part	
for PS 125	3241025
for PS 150	3241026
for PS 300	3241028

TRADES

DDP 10/DDP 20/DDP 30/DDP 50

Precision arbour presses with rugged and solid design. For mechanical workshops and repair operations

Facts that impress in terms of quality, performance and price

- For pressing in and out of bearings, mandrels, bushings, spindles, pins
- Stable design
- Premium grey cast body
- Variably adjustable lever
- Baseplate adjustable in four positions
- For fastening on a workbench





Model	DDP 10	DDP 20	DDP 30	DDP 50
Article no.	3359011	3359012	3359013	3359015
Technical data				
Max. workpiece height	123 mm	195 mm	310 mm	459 mm
Throat	95 mm	120 mm	150 mm	226 mm
Dimensions/weight				
L x W x H max.	270 x 180 x 410 mm	430 x 235 x 680 mm	455 x 260 x 850 mm	650 x 350 x 785 mm
Stamp size (L x W x H)	25 x 25 x 240 mm	32 x 32 x 345 mm	38 x 38 x 455 mm	50 x 50 x 647 mm
Net weight	14 kg	33 kg	55 kg	167 kg

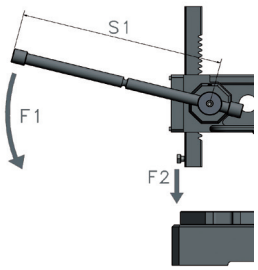

Effective force		DDP 10		DDP 20		DDP 30		DDP 50	
Hand force	F1	392.4 N	589 N	392.4 N	589 N	392.4 N	589 N	392.4 N	589 N
		(40 kg)	(60 kg)	(40 kg)	(60 kg)	(40 kg)	(60 kg)	(40 kg)	(60 kg)
Long lever	S1	340 mm		450 mm		600 mm		850 mm	
Effective force	F2	7 480 N	11 220 N	8 364 N	12 555 N	7 705 N	11 566 N	10 251 N	15 372 N
		(763 kg)	(1 143 kg)	(853 kg)	(1 280 kg)	(786 kg)	(1 179 kg)	(1 045 kg)	(1 567 kg)

MACHINE LAMPS



Robust machine lamps for individual use:

LED machine and workshop lighting	
› Electrical connection 230 V ~ 50Hz or DC 24V	› LED service life › 60 000 h
› Colour temperature neutral white 5 000 K	› Vibration-proof at 10 to 55 Hz (amplitude 0.35 mm), shockproof up to 50 g
› Safety glass	› Degree of protection IP65, protection class I (operation with PE connection)
› Robust, high-luminosity machine lamp	› Operating mode: Continuous operation
› Aluminium housing with black side parts	› Maximum permissible ambient temperature Tmax. 50 °C
› Reflection angle 120° (reflector)	› Bracket-mounted, swivel angle ± 45°

Model	MWL 1	MWL 2	MWL 3	MWL 4
Article no. AC230V	3351030	3351031	3351032	3351033
Article no. DC24V	3351040*	3351041*	3351042*	3351043*
Output	28 Watts	56 Watts	84 Watts	112 Watts
Lamp length	340 mm	630 mm	920 mm	1 210 mm
Luminosity (Lumen)	3 456 Lm	6 800 Lm	10 300 Lm	13 600 Lm

*Required safety transformer as per EN 61558-2-6 not included in scope of delivery

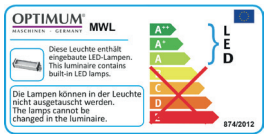

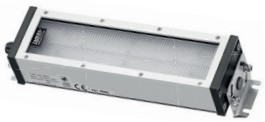

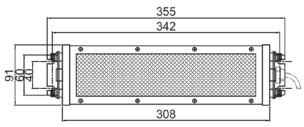



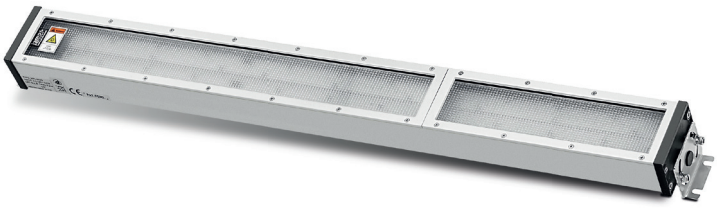

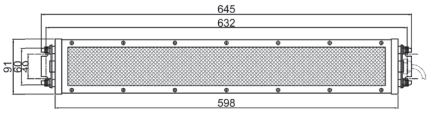

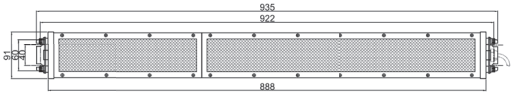

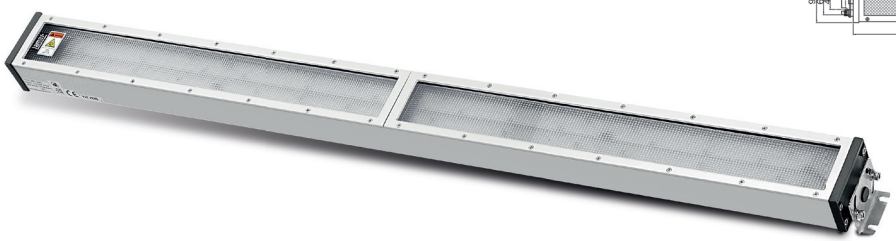

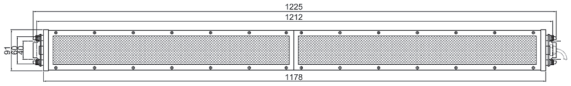

Model	LED magnifying lamp MBLV
Article no.	3351090

› Electrical connection 14 W / 230 V ~50 Hz
› Large magnifying glass: 125 mm diameter
› Luminosity dimmable 10 - 100 %
› Joint easily adjustable and lockable thanks to clamp screw
› Pleasant, glare-free light
› Articulated arm length 830 mm
› IP Degree of protection: IP20
› Magnifying lamp with 1.5x optical magnification

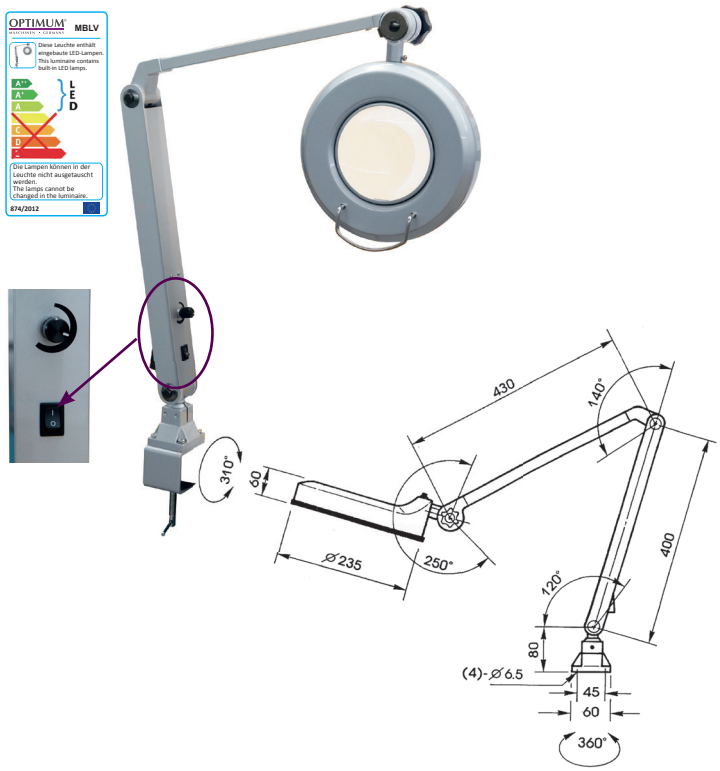

Model	Machine lamp LED 3-500
Article no.	3351010

› Electrical connection 3 x 1 W LED / 230 V ~50 Hz
› Colour temperature: 4 000 - 4 500 K
› Made of oil-resistant and impact proof plastic

› No impairment of the service life through vibration or knocks
› Optimum mobility of the articulated arm
› IP degree of protection IP64 (dust and splash-water protected)
› Lifetime 60 000 operating hours
› Low exterior temperature; lubricants and coolants do not burn on
› Mains supply cable approx. 1.2 m
› Energy-saving and durable machine lamp



Model	LED workbench lamp WBL 3
Article no.	3351062

› Electrical connection 3 x 1 Watt LED / 230 V ~50 Hz
› Luminosity 390 Lm
› Colour temperature: 5 600 - 6 000 K
› Articulated arm with sleeve for best possible mobility
› Excellent positional stability
› Swivel head
› Impact-proof, easy-to-clean plastic housing
› Arm length 520 mm
› IP Degree of protection: IP20
› Magnetic base, fixing bracket
› Integrated transformer



LED machine and workshop lamp

- › Electrical connection 6 x 2 Watt LED / 230 V ~50 Hz
- › Luminosity 1,020 Lm
- › Colour temperature: 5,600 - 6,000 K
- › Robust and powerful articulated machine lamp
- › State of the art LED technology
- › Low exterior temperature; lubricants and coolants do not burn on
- › Reflection angle 60° (reflector)
- › Base bracket-mounted, rotates through 310°
- › Maximum permissible ambient temperature Tmax. 50 °C
- › LED service life › 60,000 hours
- › Degree of protection IP65, protection class I (operation with PE connection)
- › Aluminium housing
- › Swivel head

Model	MWG 6-100
Article no.	3351051
Base size: 70 x 70 mm	



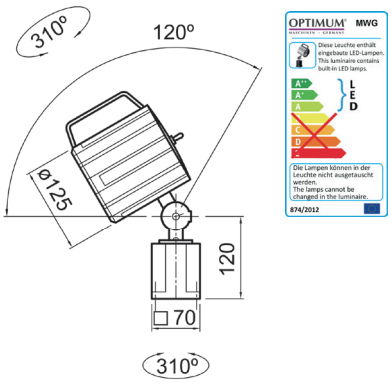

Model	MWG 6-600
Article no.	3351052
Base size: 70 x 70 mm	
Arm length: 400 mm	
Arm type: swivelling	



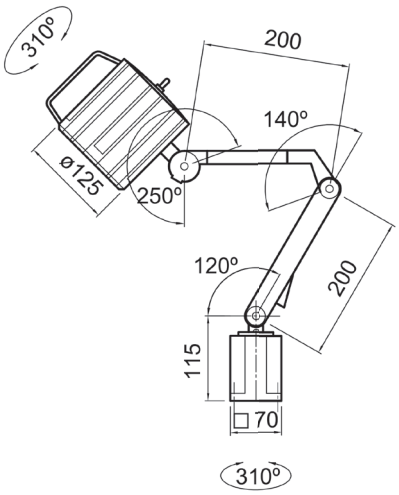

Model	MWG 6-720
Article no.	3351053
Base size: 70 x 70 mm	
Arm length: 800 mm	
Arm type: swivelling	



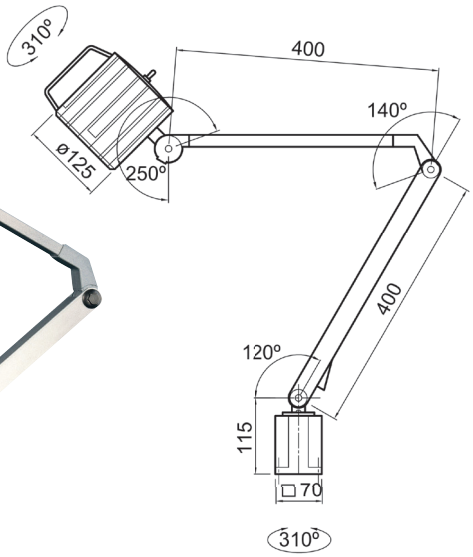

COOLANT ACCESSORIES







	Designation		Size	Article no.
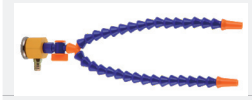	Coolant hose set 2 units articulated hose; 300 mm 2 units round nozzles, 1 unit shut-off valve 1 unit magnetic base		1/4"	3356700
			½"	3356801
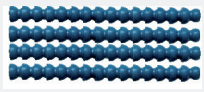	Coolant hoses 4 units articulated hose; 150 mm		1/4"	3356701
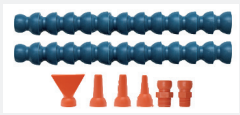	**Coolant hose set** 2 units articulated hose; 150 mm 2 units NPT coupling 1/4" and 1/8" 3 units round nozzle 1/16" / 1/8" / 1/4" 1 unit flat nozzle		1/4"	3356702
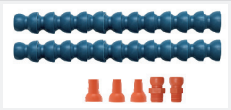	**Coolant hose set** 2 units articulated hose; 150 mm 2 units NPT coupling 1/4" and 1/8" 3 units round nozzle 1/16" / 1/8" / 1/4"		½"	3356802
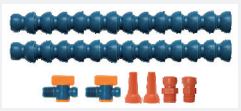	**Coolant hose set** 2 units articulated hose; 150 mm 2 units NPT coupling 1/4" and 1/8" 2 units round nozzle 1/8"/ 1/4", 2 units shut-off valve		1/4"	3356703
	**Grips**		1/4"	3356710
			½"	3356810
	**Articulated hose** Hose roll 15 metres		1/4"	3356711
			½"	3356811
	**Circular nozzles**		1/4"	3356712
			½"	3356812
	**Flat nozzles** 5-hole 5 units		1/4"	3356713
			½"	3356820
	**Flat nozzles** 5 units		1/4"	3356714
			½“	3356813
	**Flat nozzle** 75 mm wide 2 units		1/4"	3356715
			½"	3356814
	**Connector** Threaded connection RP3/8" 5 units		1/4"	3356716
			½"	3356815
	**Connector** Threaded connection RP½" 5 units		½"	3356816
	**Y connector** 5 units 1/4" 2 units ½"		1/4"	3356717
			½"	3356817
	**Cap** 5 units		1/4"	3356718
			½"	3356818
	**Shut off valve for articulated hose** 2 units	Threaded connection RP1/4"	1/4"	3356719
		Threaded connection RP½"	½"	3356819

	Designation	Size	Article no.
	**Coolant hoses basic equipment 1/4" - No. 1** › 8 units articulated hose 150 mm › 2 units each round nozzle 1/16" / 1/8" / 1/4", › 2 units NPT coupling 1/4" and 1/8", › 1 unit flat nozzle, › 1 unit Y-distributor, › 2 units shut-off valve inside and outside, › 2 units shut-off valve inside - 1/4", › 2 unit NPT extension, › 1 unit magnetic base, 1 unit flexible sealing tape	1/4"	3356704
	**Coolant hoses basic equipment 1/4" - No. 2** › 6 units articulated hose 150 mm › 2 units each round nozzle 1/16" / 1/8" / 1/4", › 2 units each NPT coupling 1/4" and 1/8", › 5 units flat nozzle, › 4 units 90° nozzle, › 1 unit Y-distributor, › 1 unit shut-off valve, inside and outside, › 1 unit shut-off valve, inside - 1/4" › 1 unit grips	1/4"	3356705
	**Coolant hoses basic equipment 1/2" - No. 1** › 6 units articulated hose 150 mm › 2 units each round nozzle 1/2" / 3/8" / 1/4", › 2 units each NPT coupling 1/4" and 1/2", › 1 unit flat nozzle, › 3 units 90° round nozzle 1/2" / 3/8" / 1/4", › 1 unit Y-distributor, › 1 unit shut-off valve, inside and outside, › 1 unit shut-off valve, inside - 1/2" › 1 unit grips	1/2"	3356800

Universal coolant unit 230 V — 3351999

› Max. delivery height 2.5 m / delivery rate 8 l/min
› Tank content 11 l / dimensions L x W x H: 370 x 245 x 170 mm
› Complete with tank, flexible tube, hose and switch/plug combination
› Magnetic base fastener for coolant hose



Coolant mist lubricator MMC1 — 3356663

› Magnetic base with a holding force of 75 kg
› Base size L x W x H: 62 x 50 x 55 mm
› Screw connection for external compressed air supply
› Flexible and stable hose with a length of 500 mm



AQUACUT C1 — 3530030

› 10 litre cannister
› For mixing emulsions
› Drilling and cooling emulsion
› High-pressure resistant and containing mineral oil, for long tool life and clean surfaces
› Emulsifiable with water, microbe-resistant and kind to the skin



Coolant hose KMS 2 — 3356660

› Insensitive to most solvents and chemicals
› Not electrically conductive
› Magnetic base holding force up to 50 kg
› Length of coolant hoses each 335 mm
› Hose connection 6 mm
› Coolant hoses ¼“



MEASURING ACCESSORIES



Accessories	Article no.
Precision magnetic measuring stand	3356650
› Measuring column Ø 12 mm x 181 mm	
› Traverse Ø 10 mm x 160 mm	
› Magnetic base L x W x H: 50 x 62 x 55 mm	
› Holding force 50 kg	
› Dial gauge holder with mounting hole for dial gauges, fine indicators, electrical length measuring probes	



Accessories	Article no.
Measuring and test platen	3385060
› Dimensions L x W x H: 630 x 400 x 100 mm	
› Precision 7 µ	
› Granite	
› Thermally and dynamically stable	
› Compressive strength 250 - 260 N/mm²	
› DIN 876/0	
› Corrosion-free	



Accessories	Article no.
Dial gauge	3385090

› Precision as per DIN 878
› Metal housing matt chrome plated
› Clamping shank 8 mm
› Scale 0.01 mm
› Measuring range 10 mm
› Outer ring with two adjustable tolerance marks
› Scale rotatable via outer ring for easy zeroing



Accessories	Article no.
Machine spirit level	3385064

› With prismatic base for levelling horizontal surfaces and shafts
› Compact and stress-free installation of the longitudinal spirit level guarantees constant precision
› Precision 0.02 mm/m
› Horizontal and longitudinal spirit level as per DIN 2276 Form B
› Eliminates time-consuming adjustment work
› Heat protected handle
› Dimensions: 200 mm x 46 mm x 46 mm



PLEASE NOTE

› These offers are intended exclusively for business owners, retailers and tradespersons who are making a purchase in pursuit of their profession or self-employment. This is an explicit CONDITION FOR THE CONCLUSION OF A CONTRACT. Consumers are not eligible to purchase as per Section 13 BGB (German Civil Code)
› The publication of this catalogue renders all previous price lists invalid.
› We accept no liability for printing errors, mistakes or incorrect representation.
› Subject to technical modifications and visual changes.
› Illustrations show accessories in some cases
› Delivery is effected solely on the basis of our terms of delivery and payment.
› The machines are delivered partly knocked down for transportation reasons.
› All items are sold through specialist retailers.
› The goods shall remain our property until payment has been received in full.
› Our retention of title shall remain valid in case of sale to a third-party.
› Legal warranty conditions apply for businesses.
› Copying and reproduction in full or in part is subject to written approval by us.
› Please note that transport packaging surcharges apply for some machines in this catalogue to cover transport units, packaging and packaging overheads. These machines are appropriately marked in the catalogue.
› For products with a stated warranty: Information on the scope, duration, content and guarantor is available on www.optimum-maschinen.de or can be requested from Optimum Maschinen Germany GmbH.
› **The entire catalog is protected by copyright. About it in addition, to protect our products, we report brand-, patent and design rights, as far as this is possible in individual cases is. We emphatically oppose any violation of our intellectual property.**

GENERAL NOTES ON OPERATING OUR MACHINES

› Our machines must be supervised at all times during operation. Leaving the machine during operations constitutes gross negligence.
› The details on machine precision are found in the technical data of the catalogue pages. If you do not find any values here, please contact info@optimum-maschinen.de for more detailed information.
› The stated precisions are achieved under standardised conditions (correct installation of the machine and ambient temperature of 20 °C). The machines are not designed for continuous operation.
› Please note that operators are required to make conversions in the event of installing third-party chucks or flanged chucks to reach the stated, technically possible rotating diameter.
› All machines are designed S6-60% operation.

OPERATION OF MACHINES WITH FREQUENCY CONVERTERS

› **Electrical connection only by a qualified electrician**
Machines with frequency inverters or inverters must not be operated via an ordinary plug. A permanent connection is required. The drive components conduct a high leakage current via the protective conductor. Touching conductive parts when the protective conductor is interrupted can result in death or serious injury.

› **Building electrics:**
In order to avoid tripping of residual current circuit breakers - if present in the building electrics - an all-current-sensitive residual current circuit breaker type B is required.
AC - sensitive AC type RCDs (AC only) are not suitable for frequency inverters. AC sensitive earth-leakage circuit breakers of type AC are no longer in use and are no longer permitted in Germany.

Stürmer WELT DER MASCHINEN

YOU WILL FIND MORE PRODUCTS IN OUR MAIN CATALOGUES



optimum-machines.com



holzkraft-machines.com



metallkraft-machines.com



holzstar.com



schweisskraft.com



en.unicraft.de



aircraft-kompressoren.com



cleancraft.eu

DISCOVER OUR PRODUCT VIDEOS NOW!

YouTube | Optimum machines

Are you familiar with our YouTube channel, **Optimum machines**?

You will find a **versatile** and **high quality selection** of product videos here.

Subscribe to our YouTube channel, to avoid missing any of the new videos: www.youtube.com/user/OptimumMaschinen

Your specialist retailer:

Официальный дилер в России:
ООО «ПО ИП»
Тел: +7 (812)602-77-08
E-mail: info@poip.ru
www.poip.ru

Sales Germany:
OPTIMUM Maschinen Germany GmbH
Dr. Robert-Pfleger-Str. 26
96103 Hallstadt/Germany

Phone: +49 (0) 9 51 - 96 555 - 0
e-Mail: info@optimum-maschinen.de

www.optimum-maschinen.de

Sales Austria:
AIRCRAFT Kompressorenbau und Maschinengroßhandel GmbH
Gewerbestraße Ost 6
4921 Hohenzell / Austria

Phone: +43 (0) 77 52 - 70 929 - 0
e-Mail: info@aircraft.at
Web: www.aircraft.at

© OPTIMUM Maschinen Germany GmbH / Article no. **8000381-21** 2020-10